Via Tangenziale, 22 - 62010 Montecosaro - Macerata - Italy
www.vittorazi.com - info@vittorazi.com
T.F. +39.0733.866585 Partita I.V.A. 01376410435

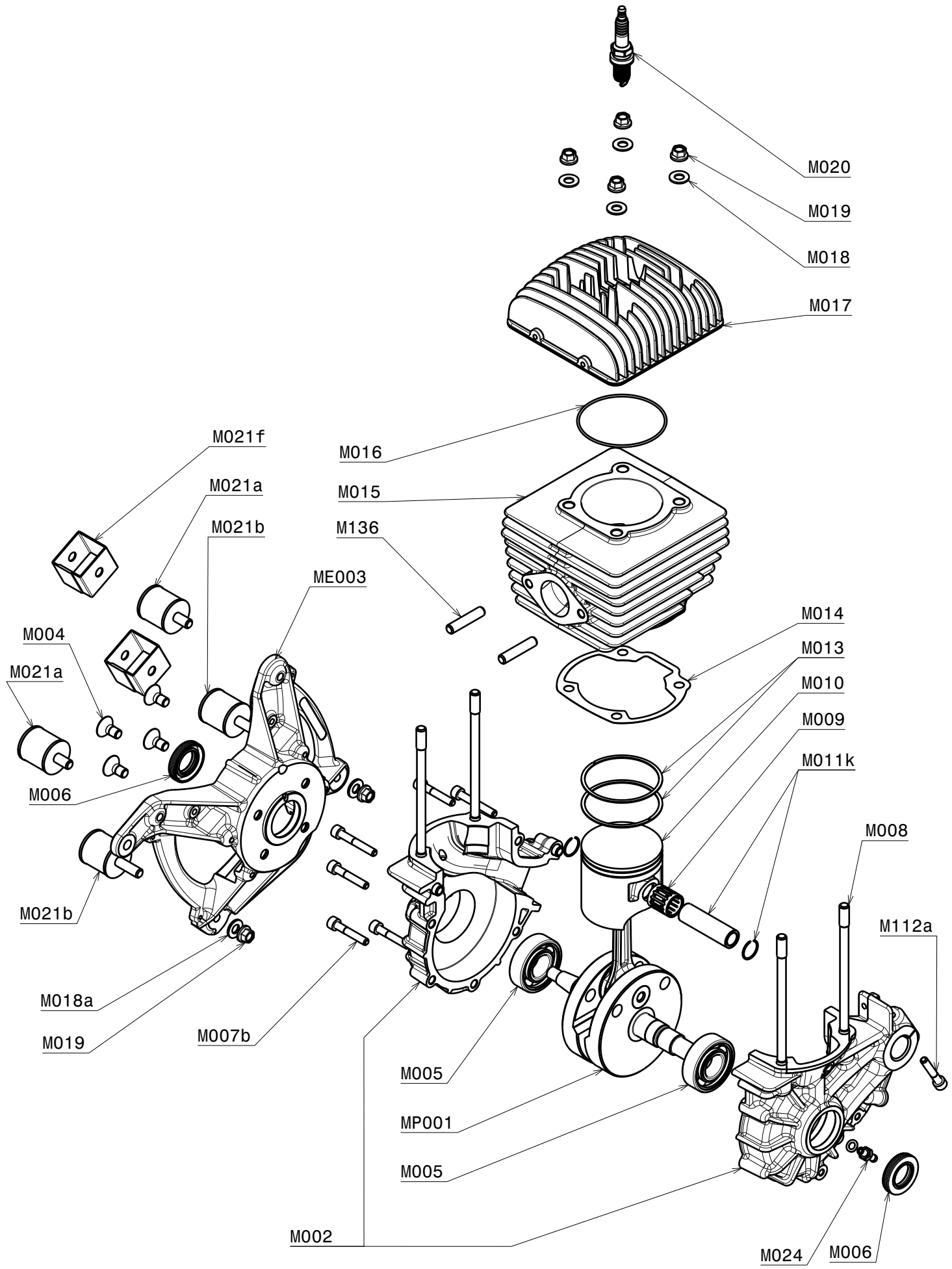

Engine: Moster 185 Plus (Dark evolution)			I.P.C. Number 0042
Version: Dual	Group: Thermal Unit	Update: Feb 2022	Page: 1/5

vittorazi MOTORS
Via Tangenziale, 22 - 62010 Montecosaro - Macerata - Italy
www.vittorazi.com - info@vittorazi.com
T.F. +39.0733.866585 Partita I.V.A. 01376410435

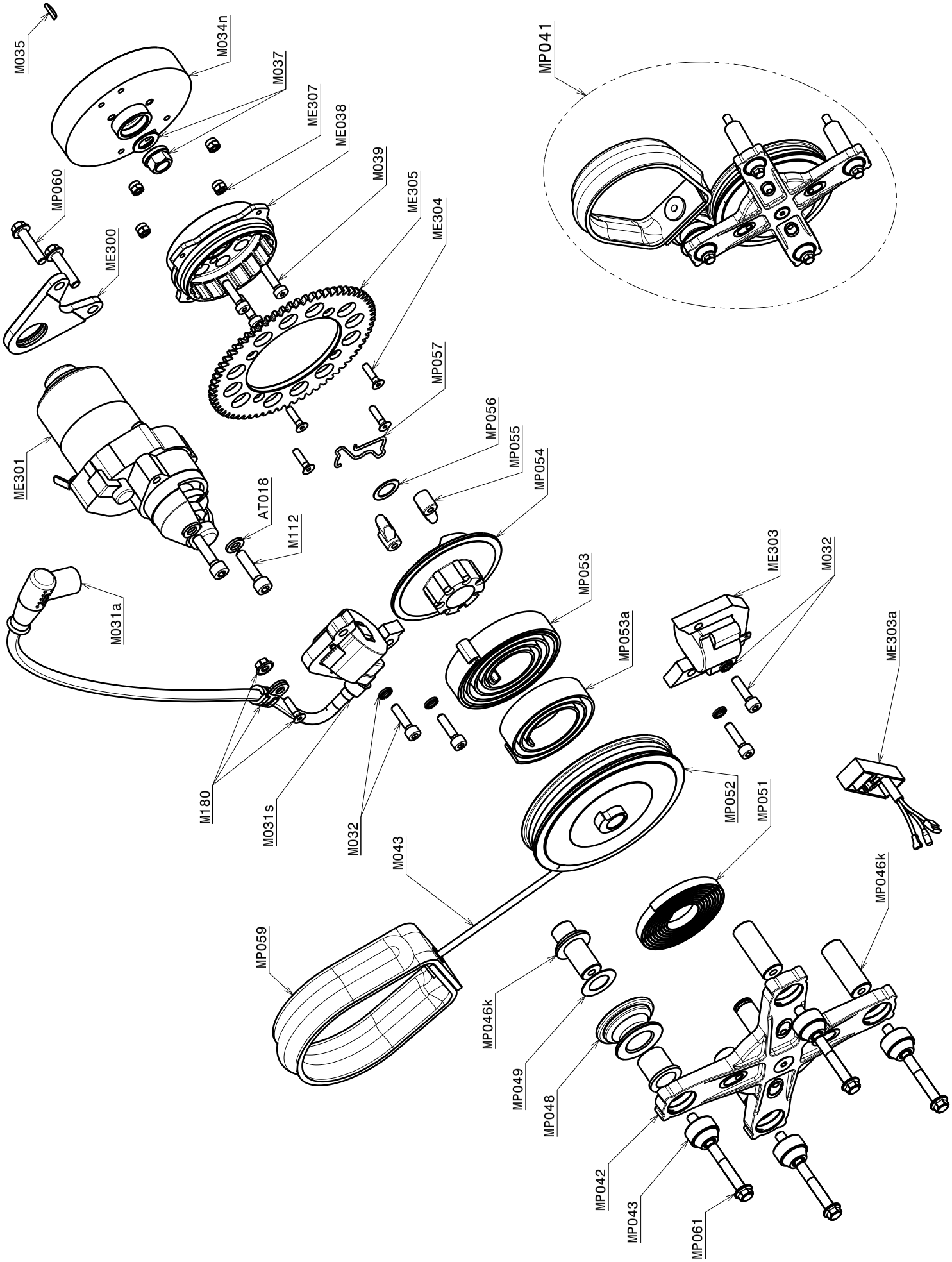

Engine: Moster 185 Plus (Dark evolution)		I.P.C. Number 0042	
Version: Dual	Group: Pull starter	Update: Feb 2022	Page: 2/5

vittorazi MOTORS
Via Tangenziale, 22 - 62010 Montecosaro - Macerata - Italy
www.vittorazi.com - info@vittorazi.com
T.F. +39.0733.866585 Partita I.V.A. 01376410435

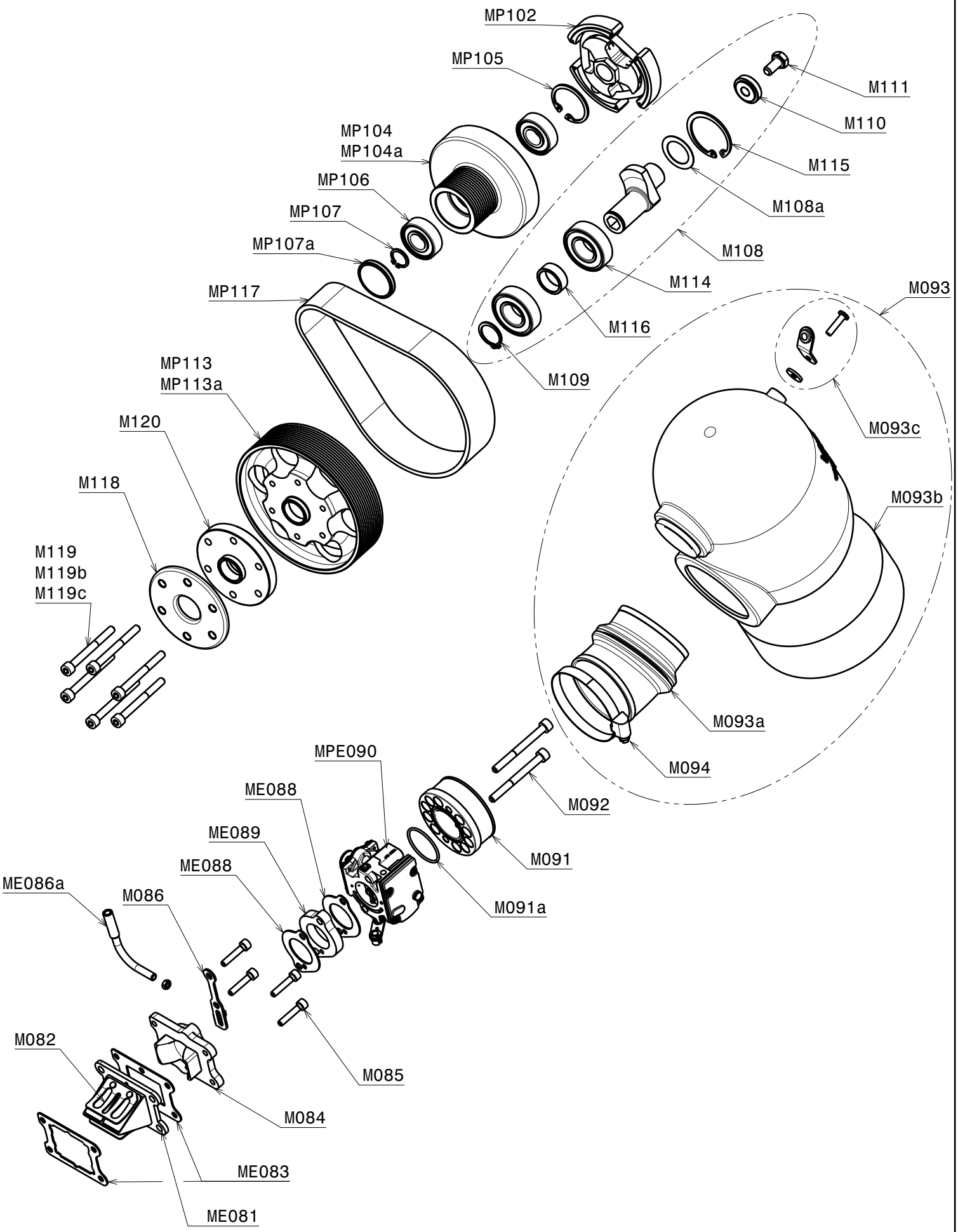

Engine: Moster 185 Plus (Dark evolution)			I.P.C. Number 0042
Version: Dual	Group: Reduction drive/Aspiration	Update: Feb 2022	Page: 3/5

Via Tangenziale, 22 - 62010 Montecosaro - Macerata - Italy
www.vittorazi.com - info@vittorazi.com
T.F. +39.0733.866585 Partita I.V.A. 01376410435

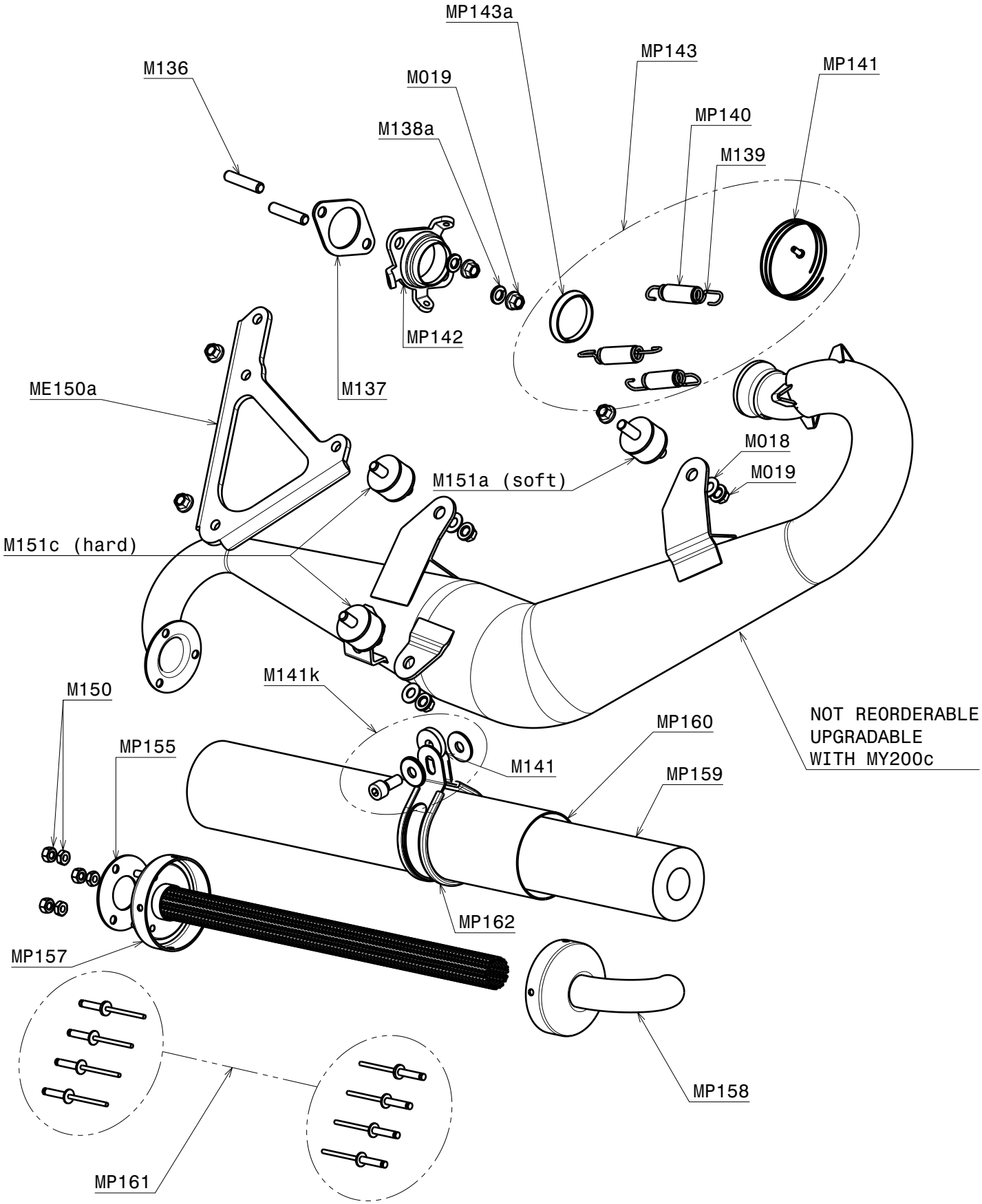

Engine: Moster 185 Plus (Dark evolution)			I.P.C. Number 0042
Version: Dual	Group: Exhaust	Update: Feb 2022	Page: 4/5

Via Tangenziale, 22 - 62010 Montecosaro - Macerata - Italy
www.vittorazi.com - info@vittorazi.com
T.F. +39.0733.866585 Partita I.V.A. 01376410435

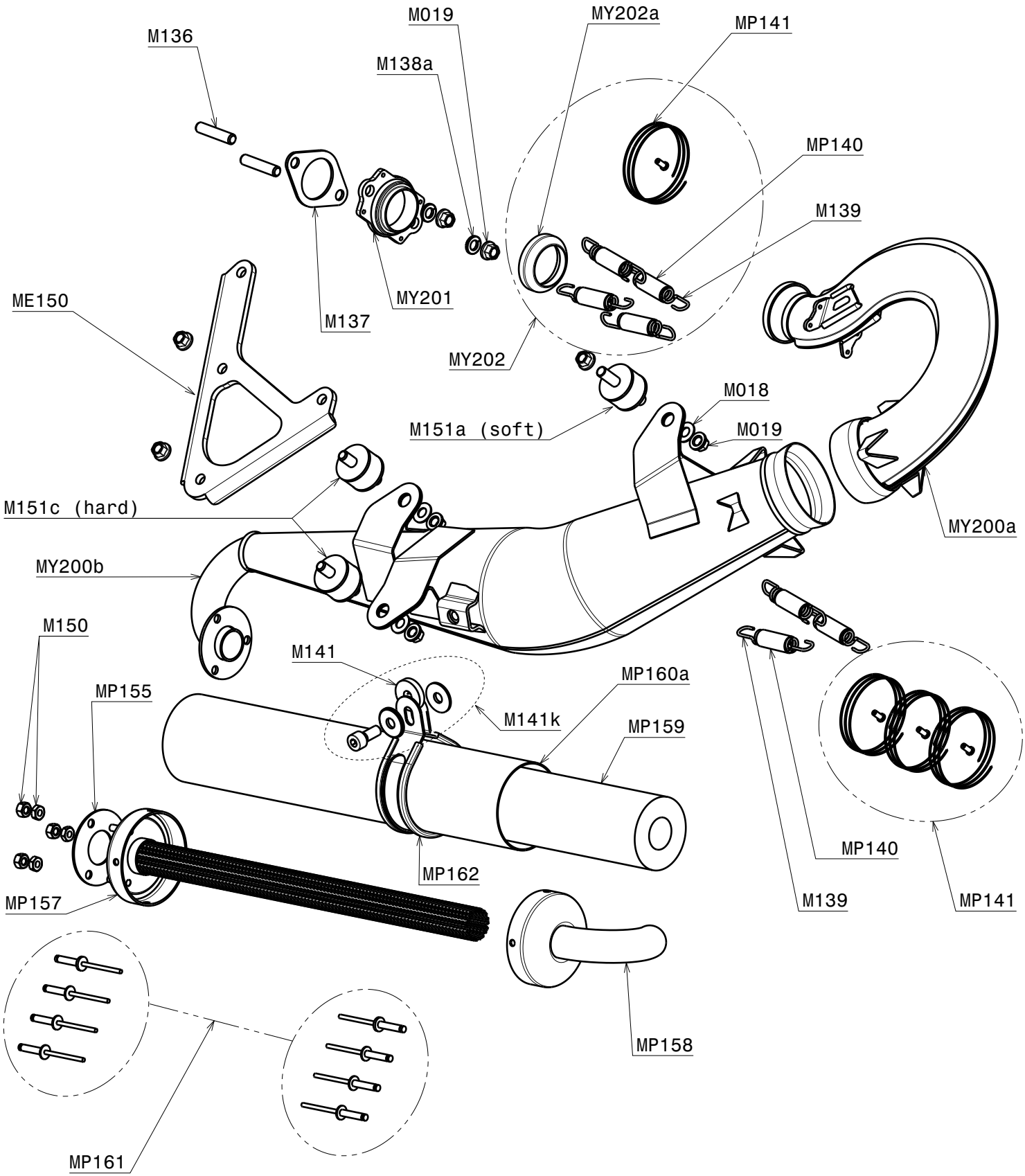

MY200c

Engine: Moster 185 Plus (Dark evolution) - For Exhaust Re-Order			I.P.C. Number 0042
Version: Dual	Group: Exhaust	Update: Feb 2022	Page: 5/5