Via Tangenziale, 22 - 62010 Montecosaro - Macerata - Italy
www.vittorazi.com - info@vittorazi.com
T.F. +39.0733.866585 Partita I.V.A. 01376410435

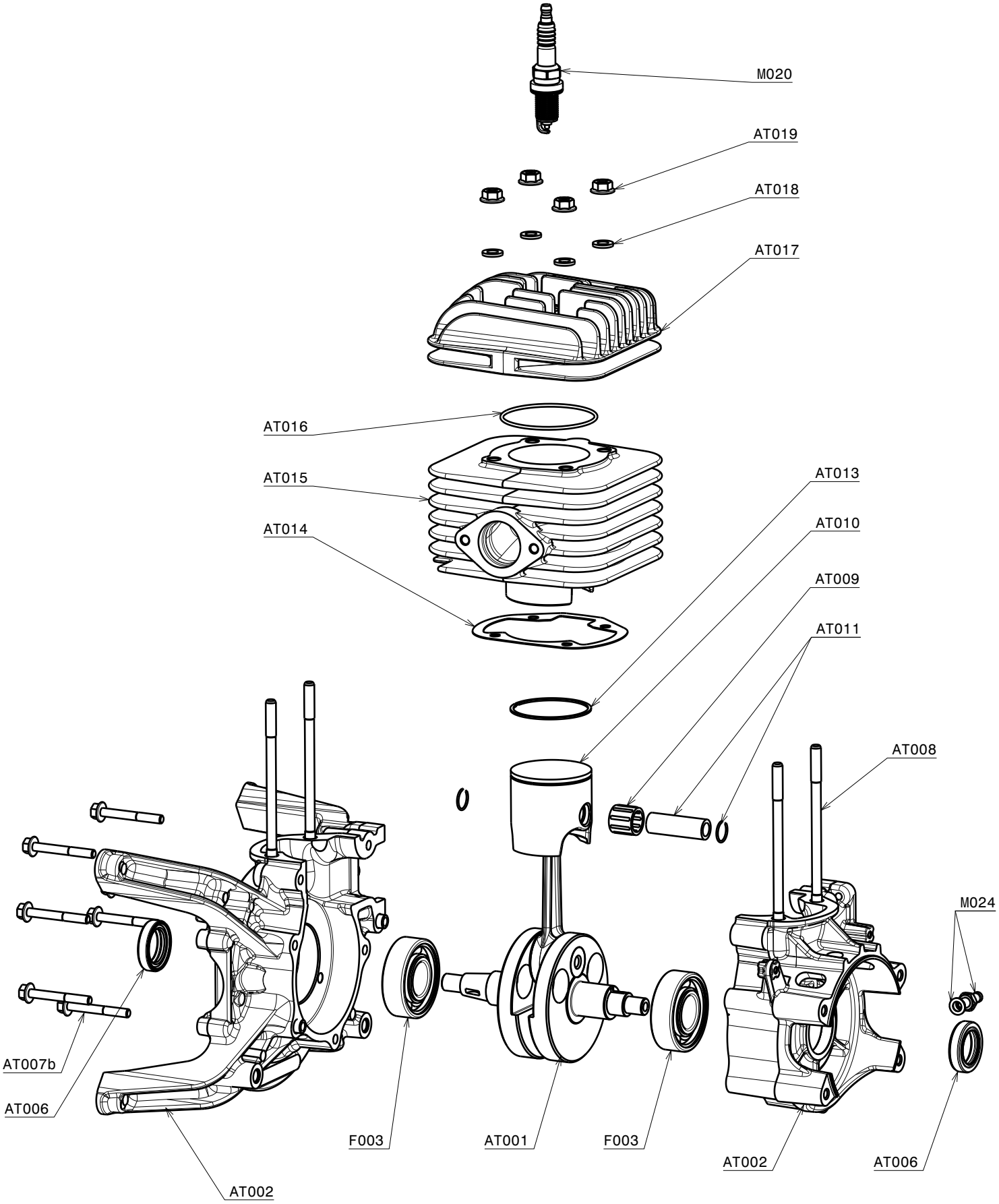

Engine: Atom 80 MY20		**I.P.C. Number 0061**	
Version: Manual	**Group: Thermal Unit**	**Update: Feb 2022**	**Page: 1/4**

vittorazi MOTORS
Via Tangenziale, 22 - 62010 Montecosaro - Macerata - Italy
www.vittorazi.com - info@vittorazi.com
T.F. +39.0733.866585 Partita I.V.A. 01376410435

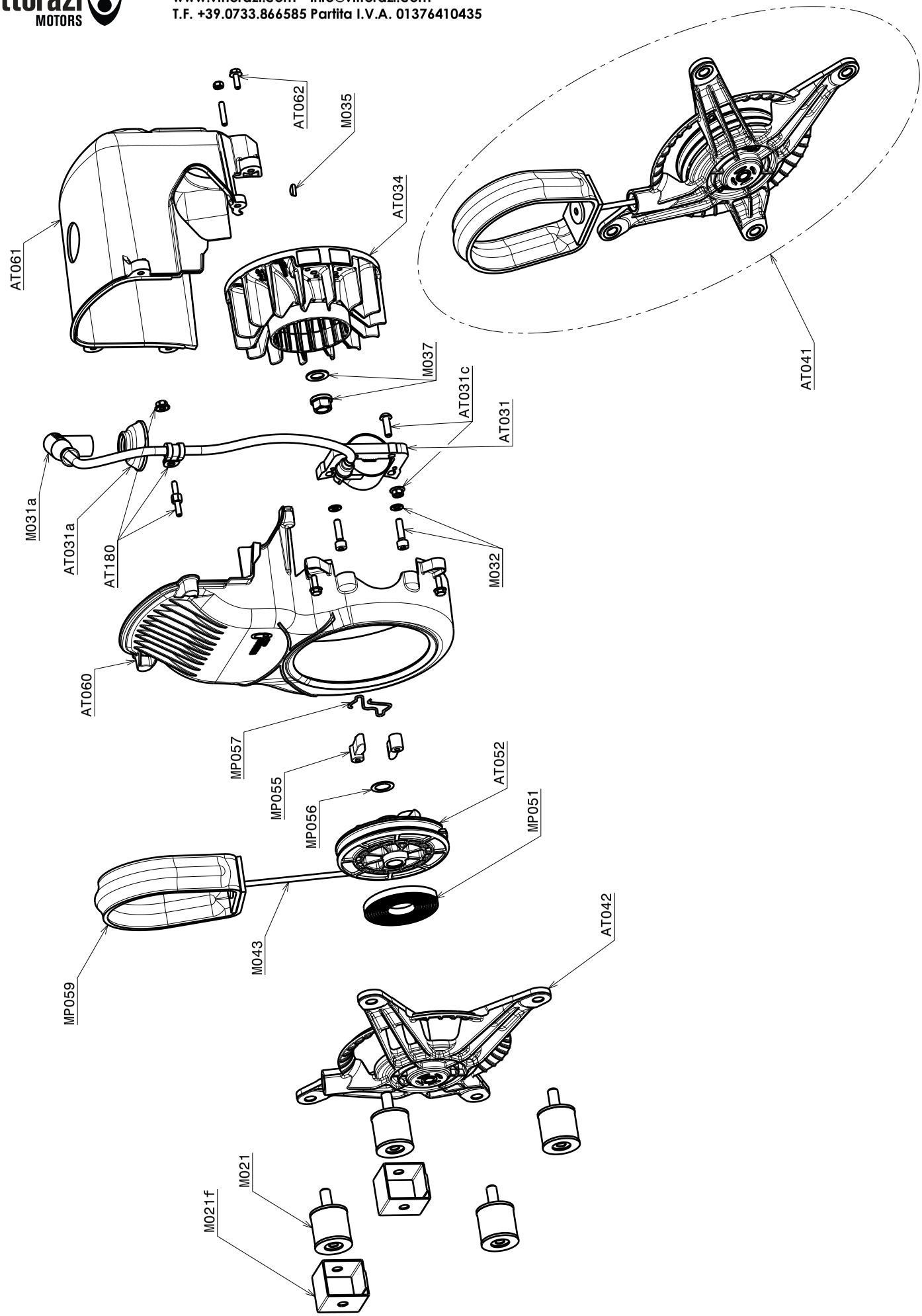

Engine: Atom 80 MY20			I.P.C. Number 0061
Version: Manual	Group: Pull Starter	Update: Feb 2022	Page: 2/4

vittorazi MOTORS
Via Tangenziale, 22 - 62010 Montecosaro - Macerata - Italy
www.vittorazi.com - info@vittorazi.com
T.F. +39.0733.866585 Partita I.V.A. 01376410435

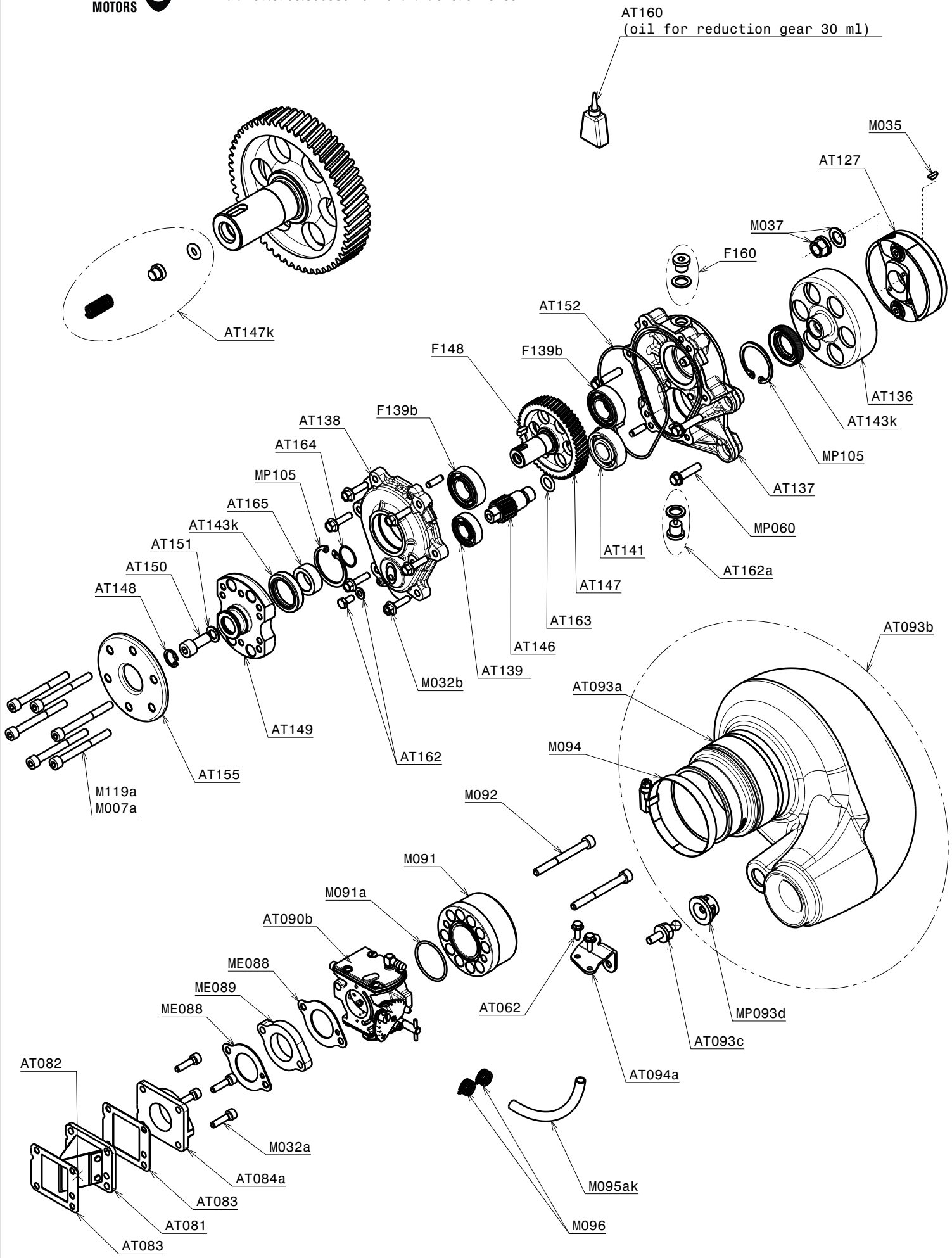

Engine: Atom 80 MY20			I.P.C. Number 0061
Version: Manual	Group: Reduction drive/Aspiration	Update: Feb 2022	Page: 3/4

vittorazi MOTORS
Via Tangenziale, 22 - 62010 Montecosaro - Macerata - Italy
www.vittorazi.com - info@vittorazi.com
T.F. +39.0733.866585 Partita I.V.A. 01376410435

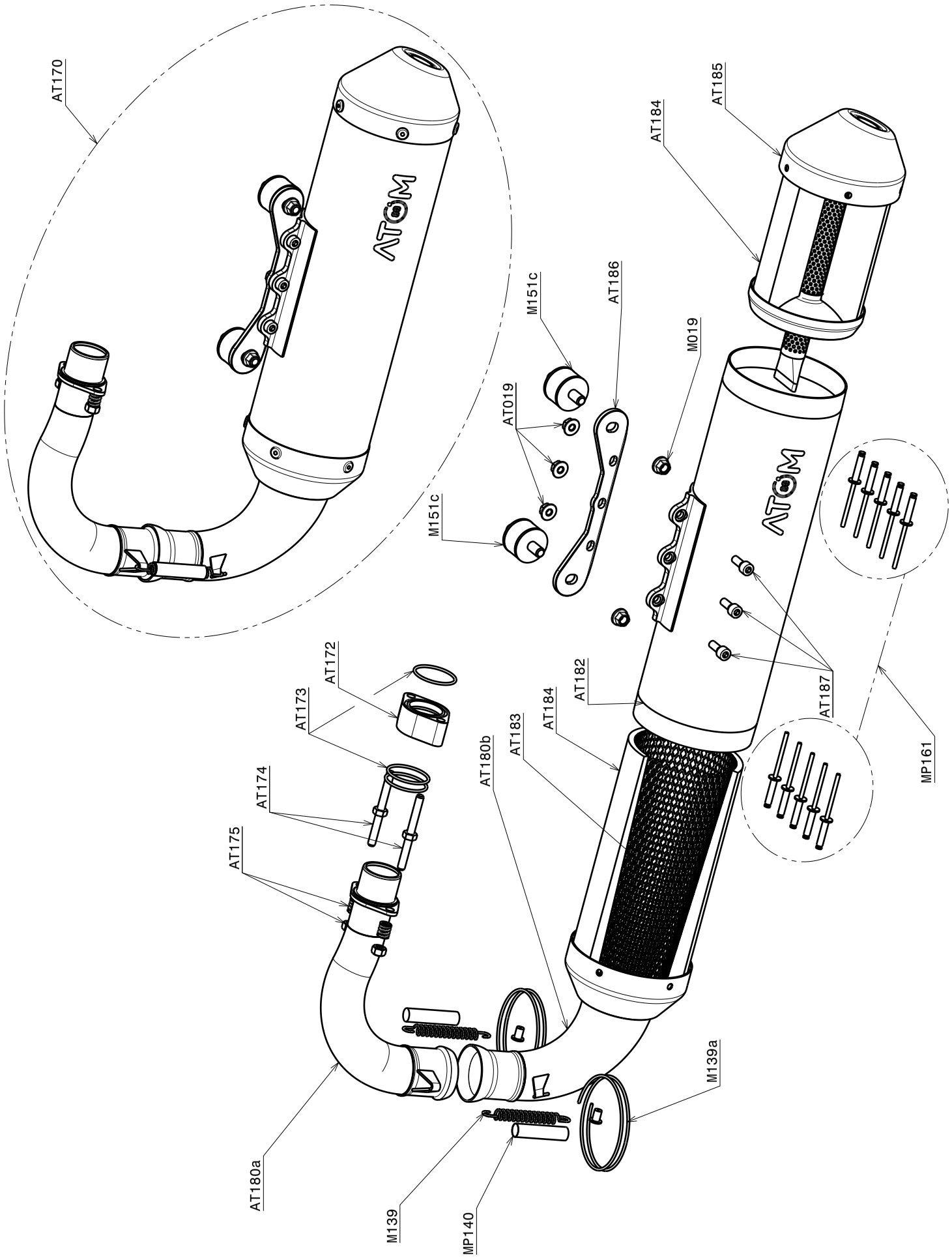

Engine: Atom 80 MY20		I.P.C. Number 0061	
Version: Manual	Group: Exhaust	Update: Feb 2022	Page: 4/4