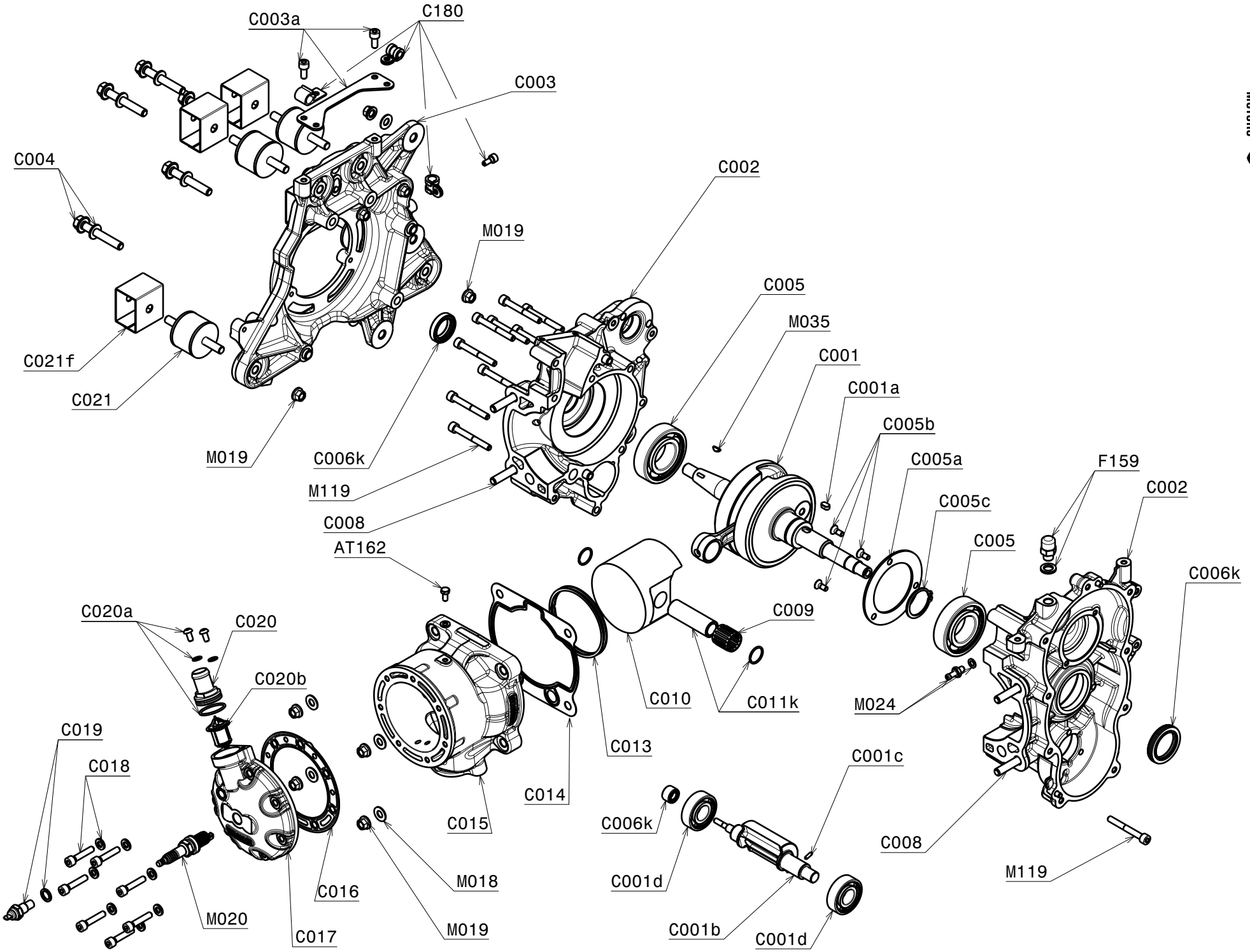

Via Tangenziale, 22 - 62010 Montecosaro - Macerata - Italy
www.vittorazi.com - info@vittorazi.com
T.F. +39.0733.866585 Partita I.V.A. 01376410435

Engine: Cosmos 300 | I.P.C. Number 0071
Version: Dual/Single spark | Group: Thermal Unit | Update: Feb 2022 | Page: 1/5

Via Tangenziale, 22 - 62010 Montecosaro - Macerata - Italy
www.vittorazi.com - info@vittorazi.com
T.F. +39.0733.866585 Partita I.V.A. 01376410435

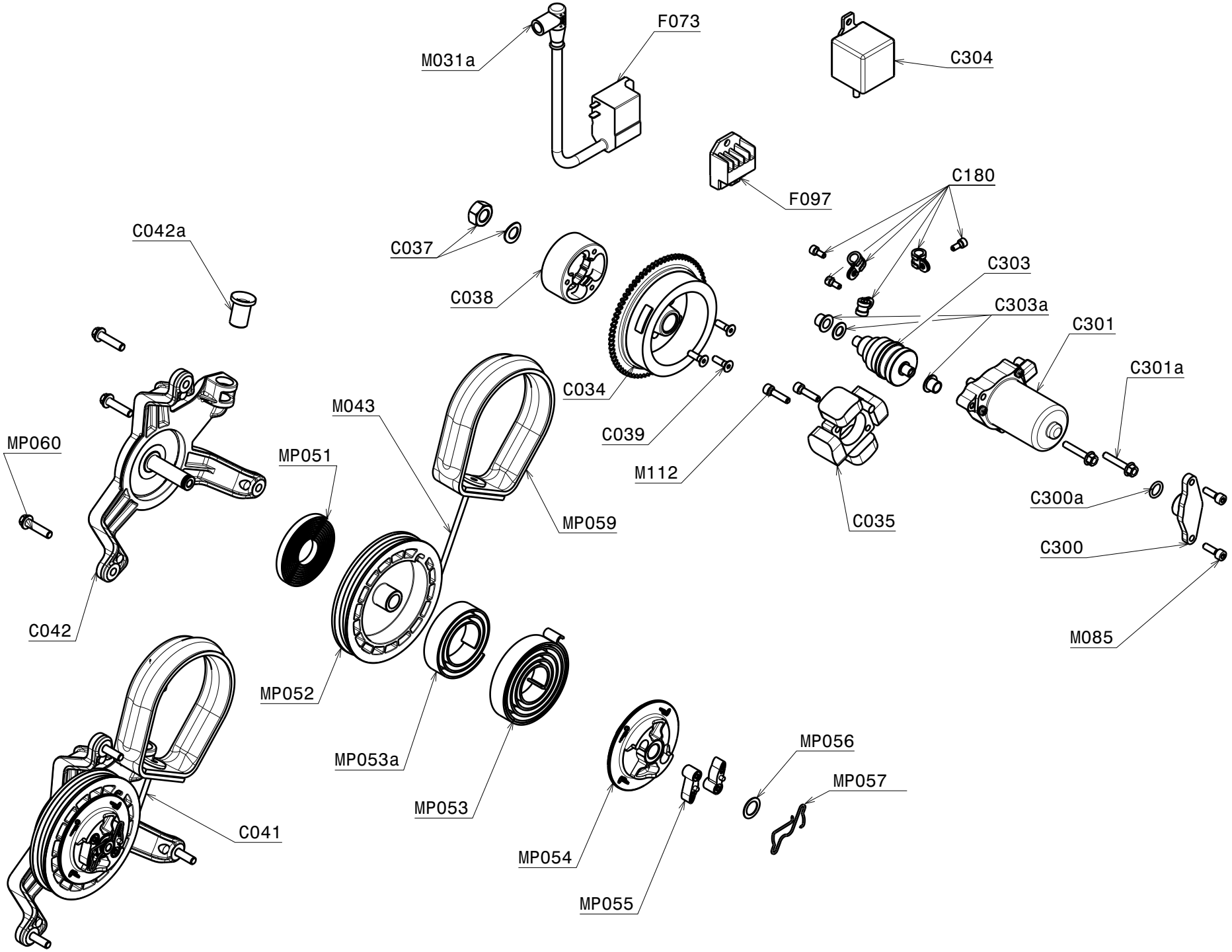

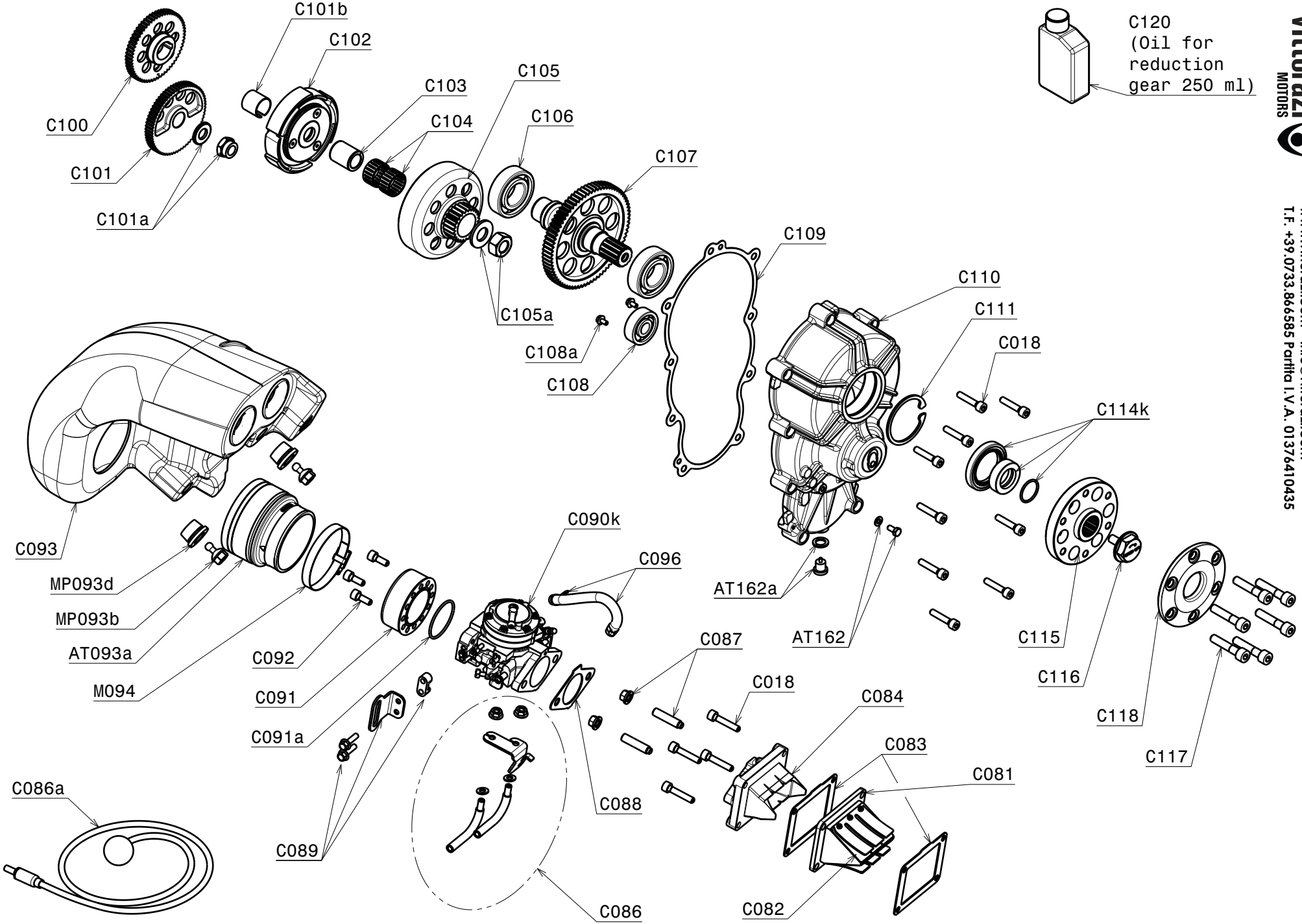

Via Tangenziale, 22 - 62010 Montecosaro - Macerata - Italy
www.vittorazi.com - info@vittorazi.com
T.F. +39.0733.866585 Partita I.V.A. 01376410435

vittorazi MOTORS
Via Tangenziale, 22 - 62010 Montecosaro - Macerata - Italy
www.vittorazi.com - info@vittorazi.com
T.F. +39.0733.866585 Partita I.V.A. 01376410435

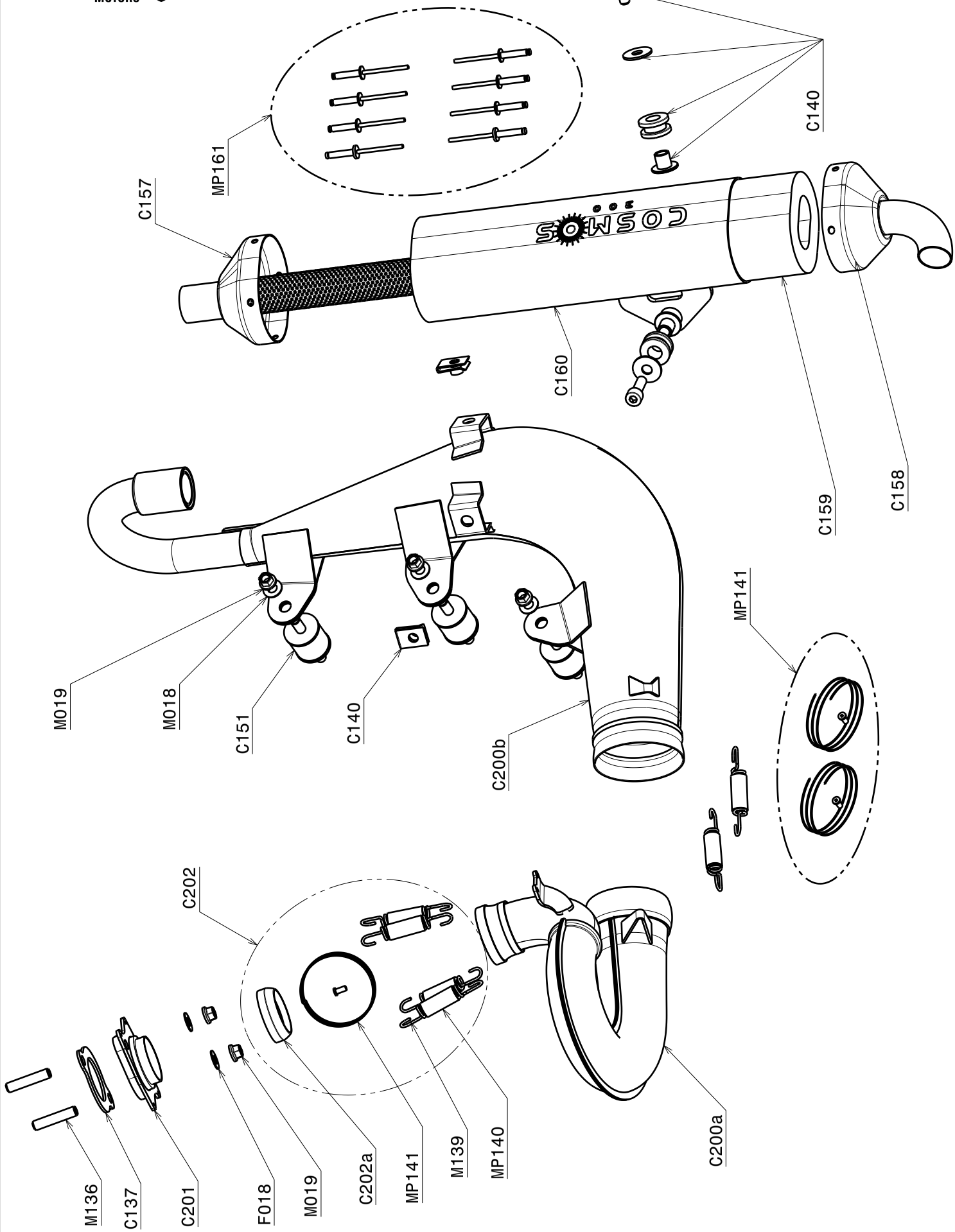

Engine: Cosmos 300		I.P.C. Number 0071	
Version: Dual/Single spark	Group: Exhaust	Update: Feb 2022	Page: 4/5

Via Tangenziale, 22 - 62010 Montecosaro - Macerata - Italy
www.vittorazi.com - info@vittorazi.com
T.F. +39.0733.866585 Partita I.V.A. 01376410435

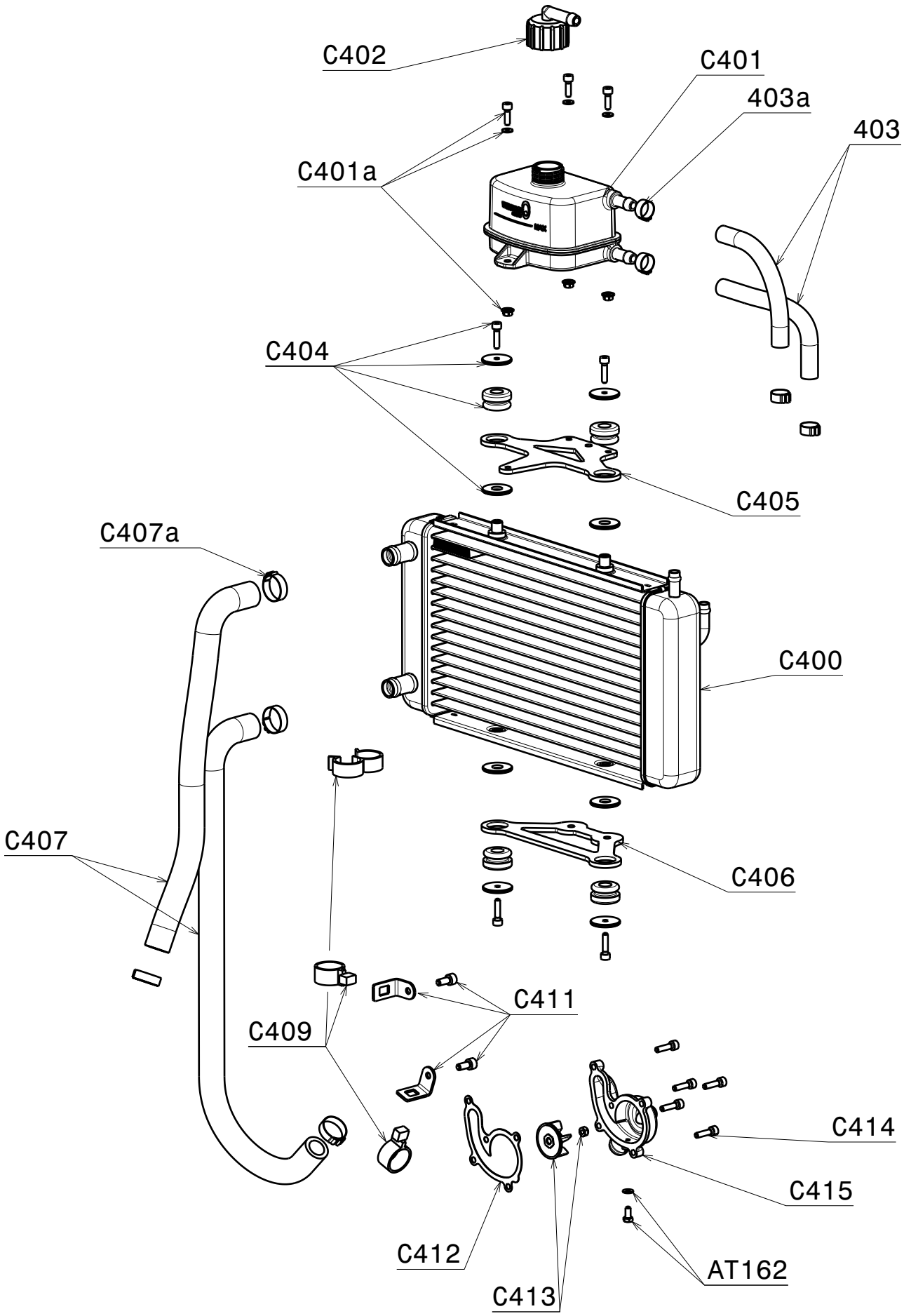

Engine: Cosmos 300			I.P.C. Number 0071
Version: Dual/Single spark	Group: Radiator	Update: Feb 2022	Page: 5/5