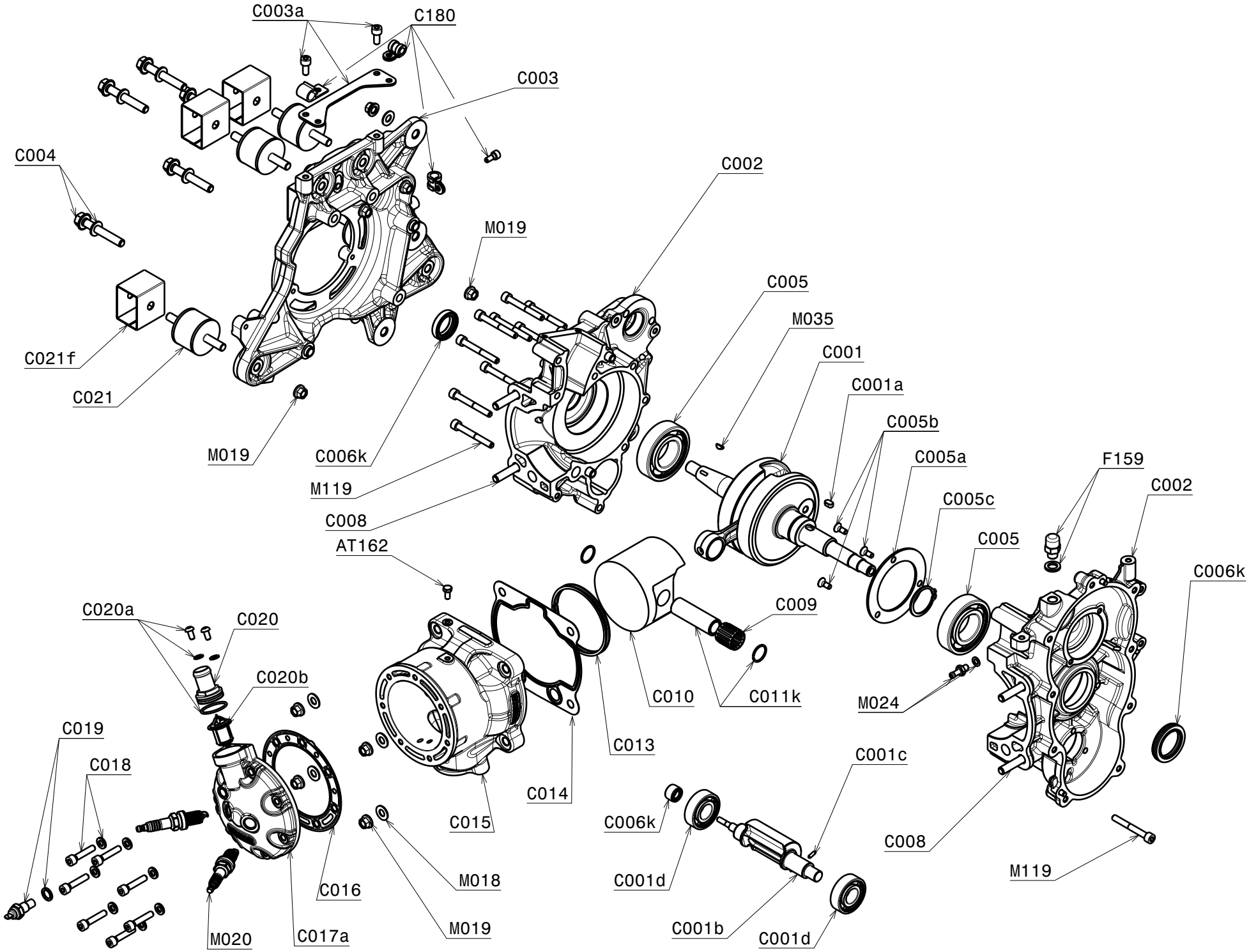

Via Tangenziale, 22 - 62010 Montecosaro - Macerata - Italy
www.vittorazi.com - info@vittorazi.com
T.F. +39.0733.866585 Partita I.V.A. 01376410435

Engine: Cosmos 300 MY23
Version: Dual/Twin spark
Group: Thermal Unit
I.P.C. Number 0075
Update: March 2023

Via Tangenziale, 22 - 62010 Montecosaro - Macerata - Italy
www.vittorazi.com - info@vittorazi.com
T.F. +39.0733.866585 Partita I.V.A. 01376410435

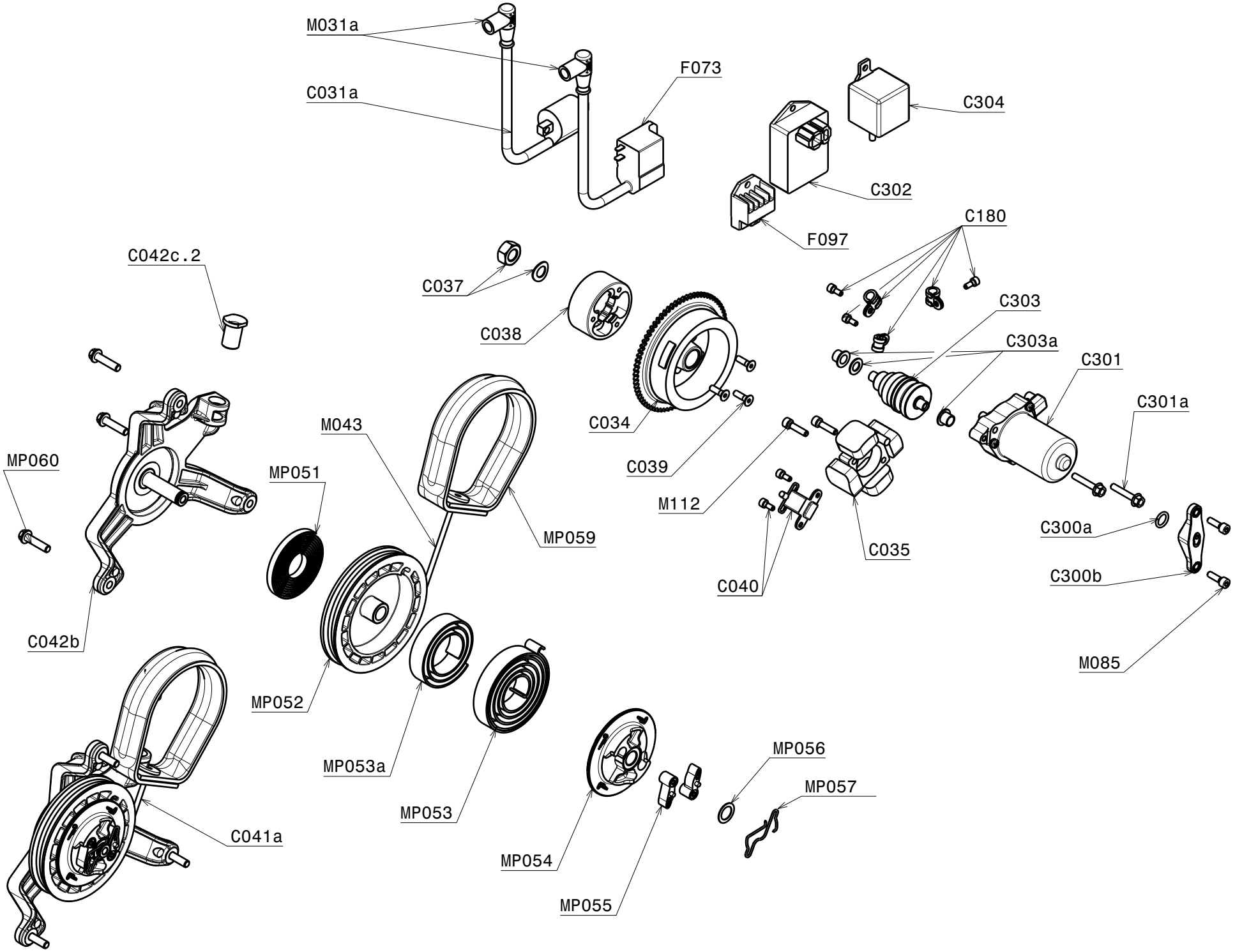

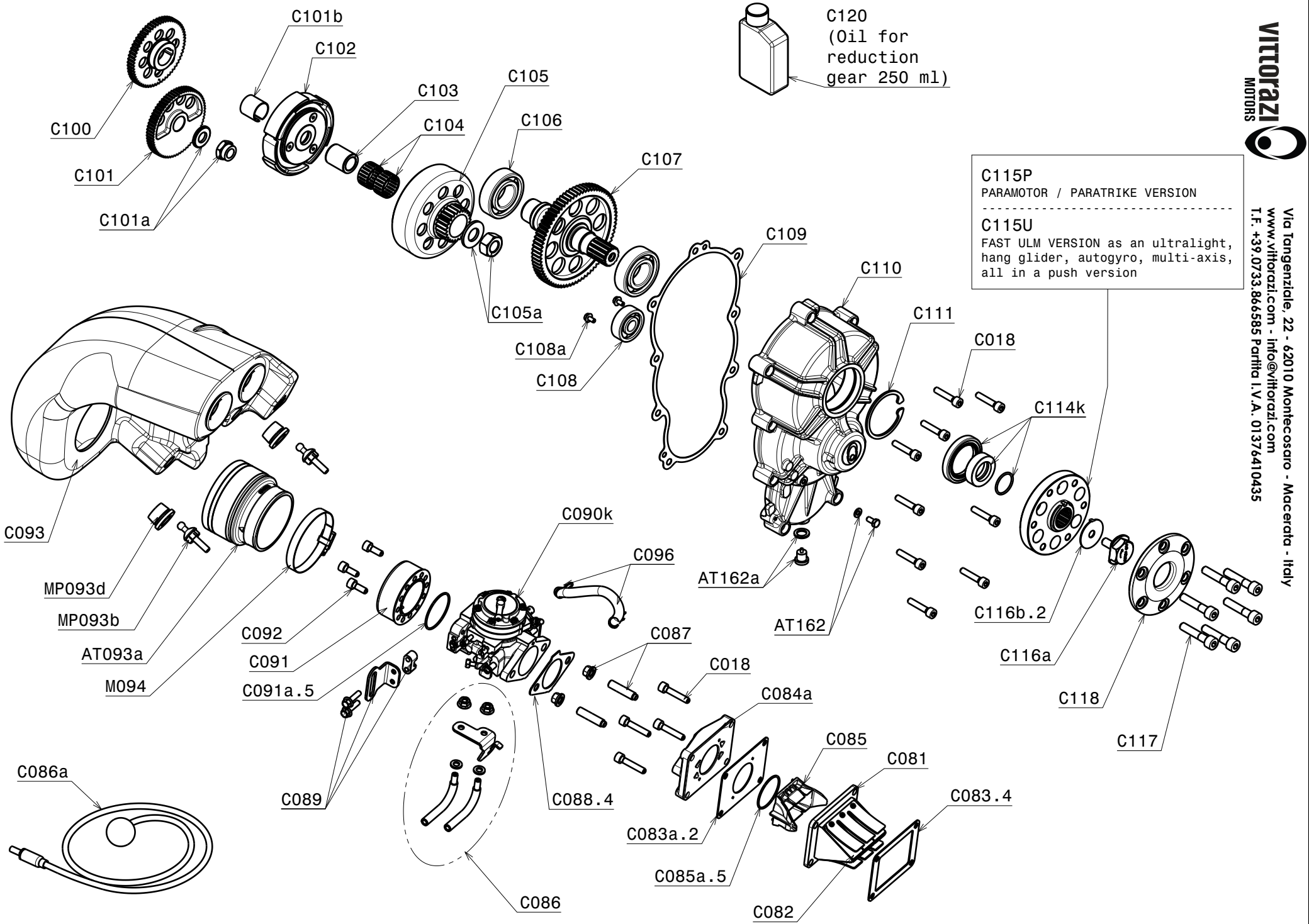

Vittorazi MOTORS
Via Tangenziale, 22 - 62010 Montecosaro - Macerata - Italy
www.vittorazi.com - info@vittorazi.com
T.F. +39.0733.866585 Partita I.V.A. 01376410435

vittorazi MOTORS
Via Tangenziale, 22 - 62010 Montecosaro - Macerata - Italy
www.vittorazi.com - info@vittorazi.com
T.F. +39.0733.866585 Partita I.V.A. 01376410435

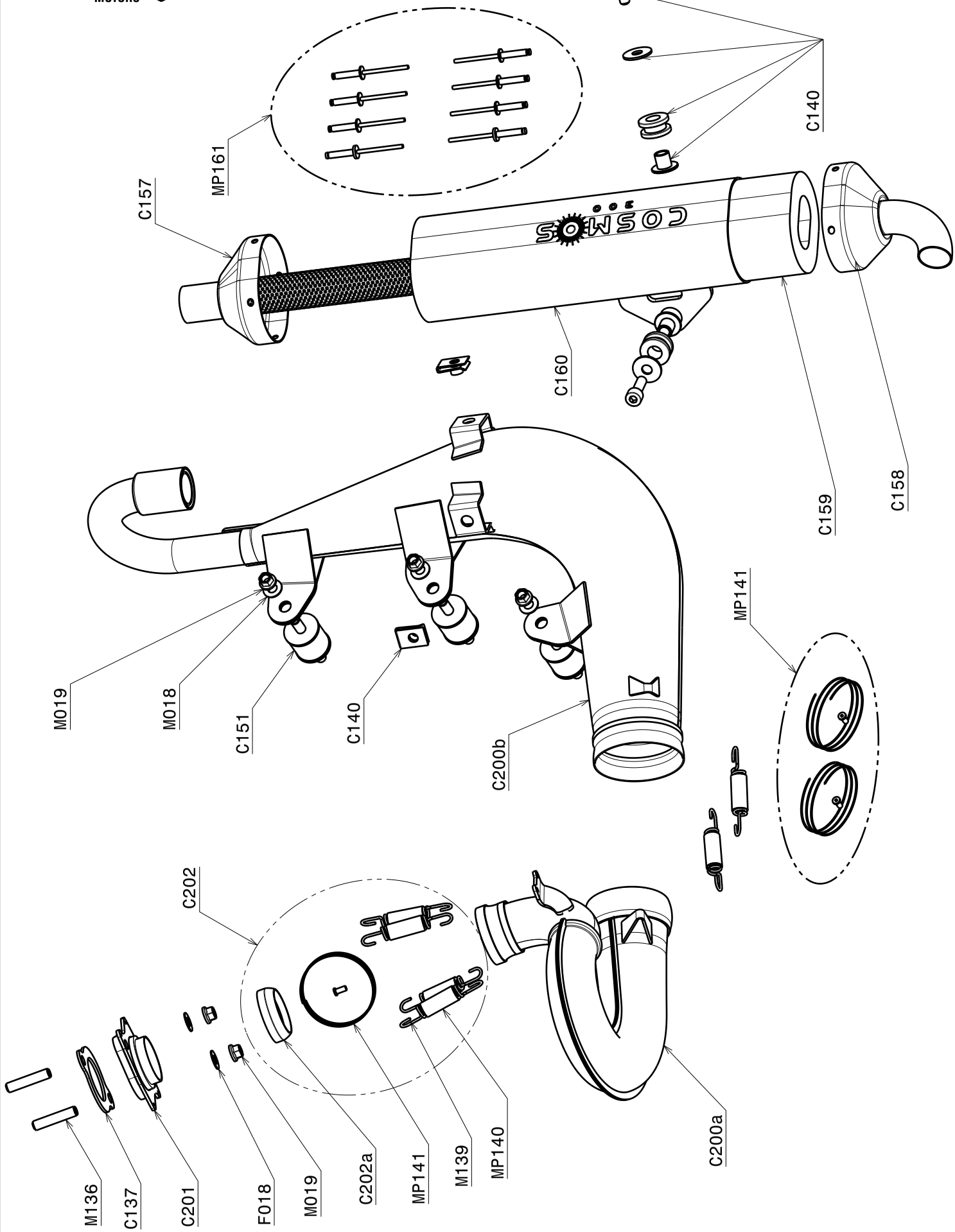

Engine: Cosmos 300 MY23		I.P.C. Number 0075	
Version: Dual/Twin spark	Group: Exhaust	Update: March 2023	Page: 4/5

Via Tangenziale, 22 - 62010 Montecosaro - Macerata - Italy
www.vittorazi.com - info@vittorazi.com
T.F. +39.0733.866585 Partita I.V.A. 01376410435

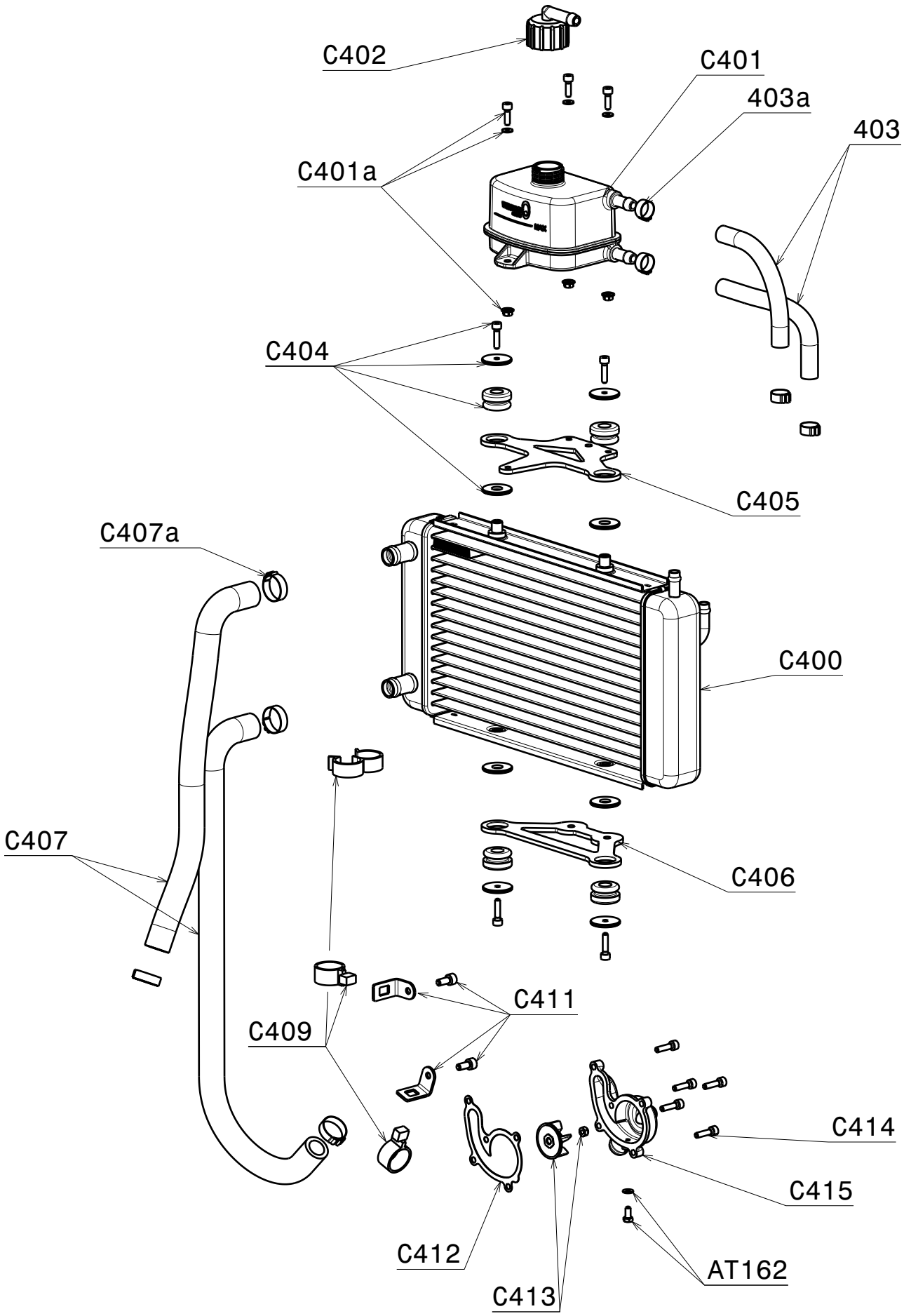

Engine: Cosmos 300 MY23			I.P.C. Number 0075
Version: Dual/Twin spark	Group: Radiator	Update: March 2023	Page: 5/5