Via Tangenziale, 22 - 62010 Montecosaro - Macerata - Italy
www.vittorazi.com - info@vittorazi.com
T.F. +39.0733.866585 Partita I.V.A. 01376410435

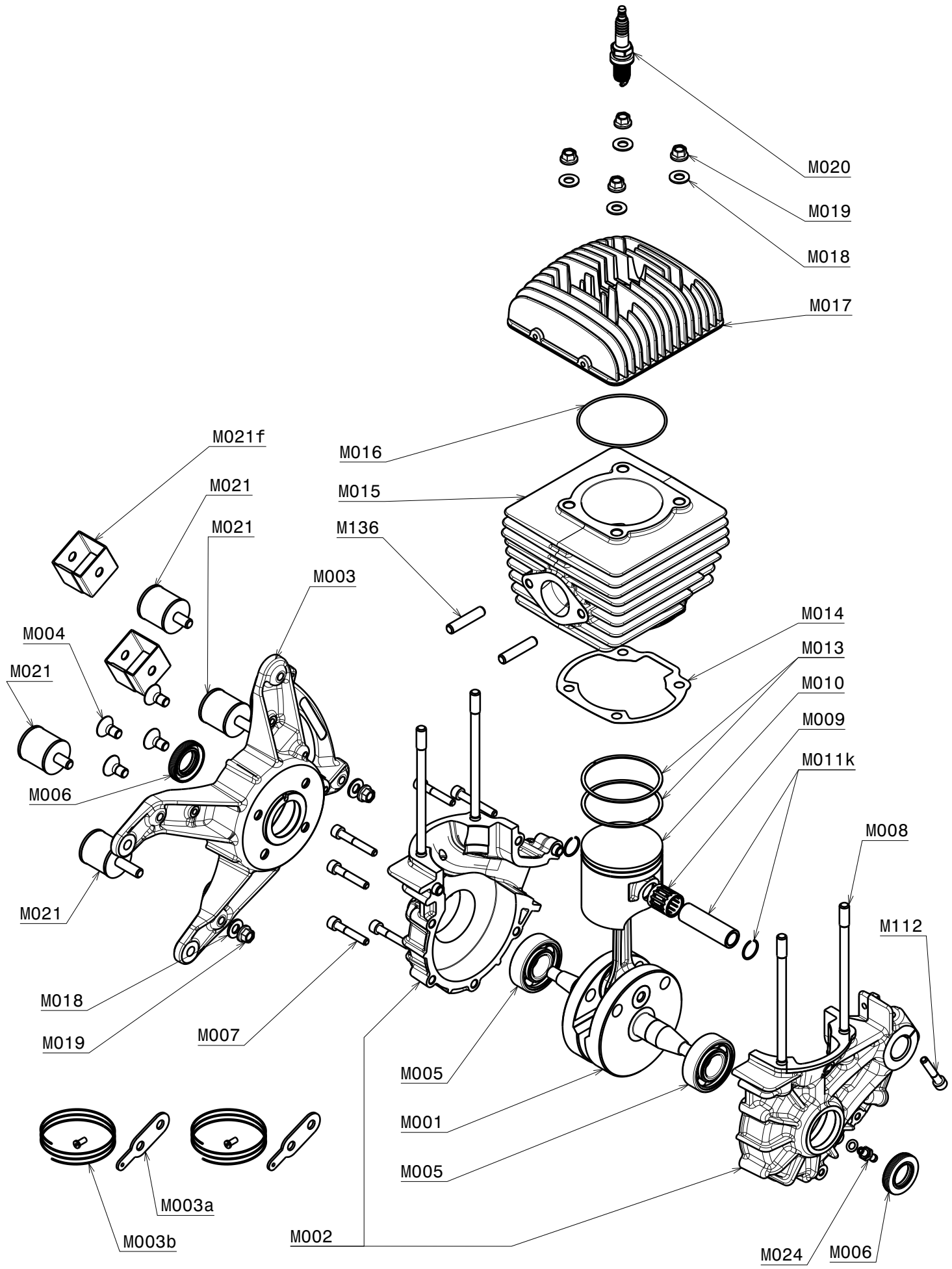

Engine: Moster 185 Classic (First version)			I.P.C. Number 0020
Version: Manual	Group: Thermal Unit	Update: Feb 2022	Page: 1/5

Via Tangenziale, 22 - 62010 Montecosaro - Macerata - Italy
www.vittorazi.com - info@vittorazi.com
T.F. +39.0733.866585 Partita I.V.A. 01376410435

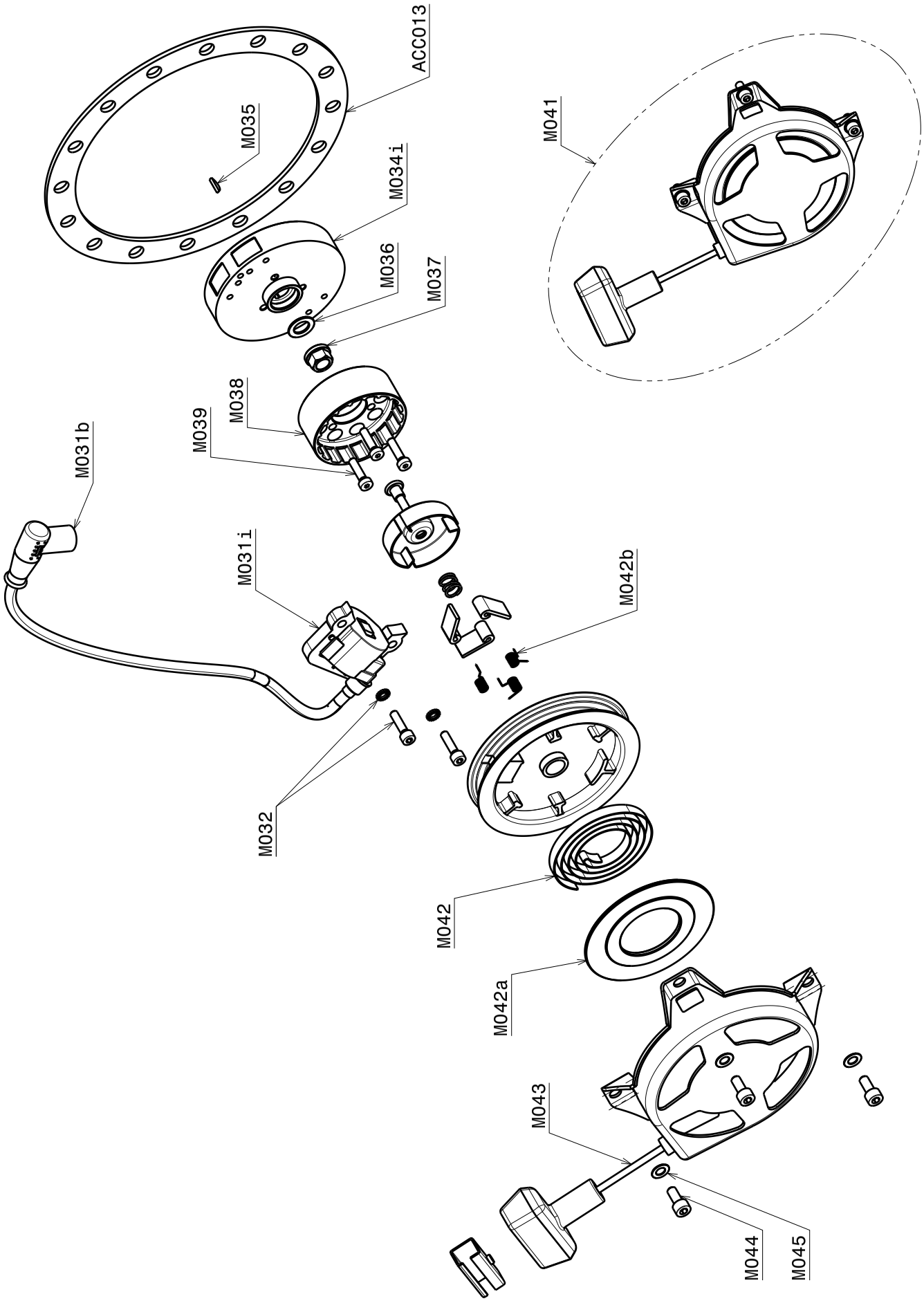

Engine: Moster 185 Classic (First version)			I.P.C. Number 0020
Version: Manual	Group: Pull starter	Update: Feb 2022	Page: 2/5

Via Tangenziale, 22 - 62010 Montecosaro - Macerata - Italy
www.vittorazi.com - info@vittorazi.com
T.F. +39.0733.866585 Partita I.V.A. 01376410435

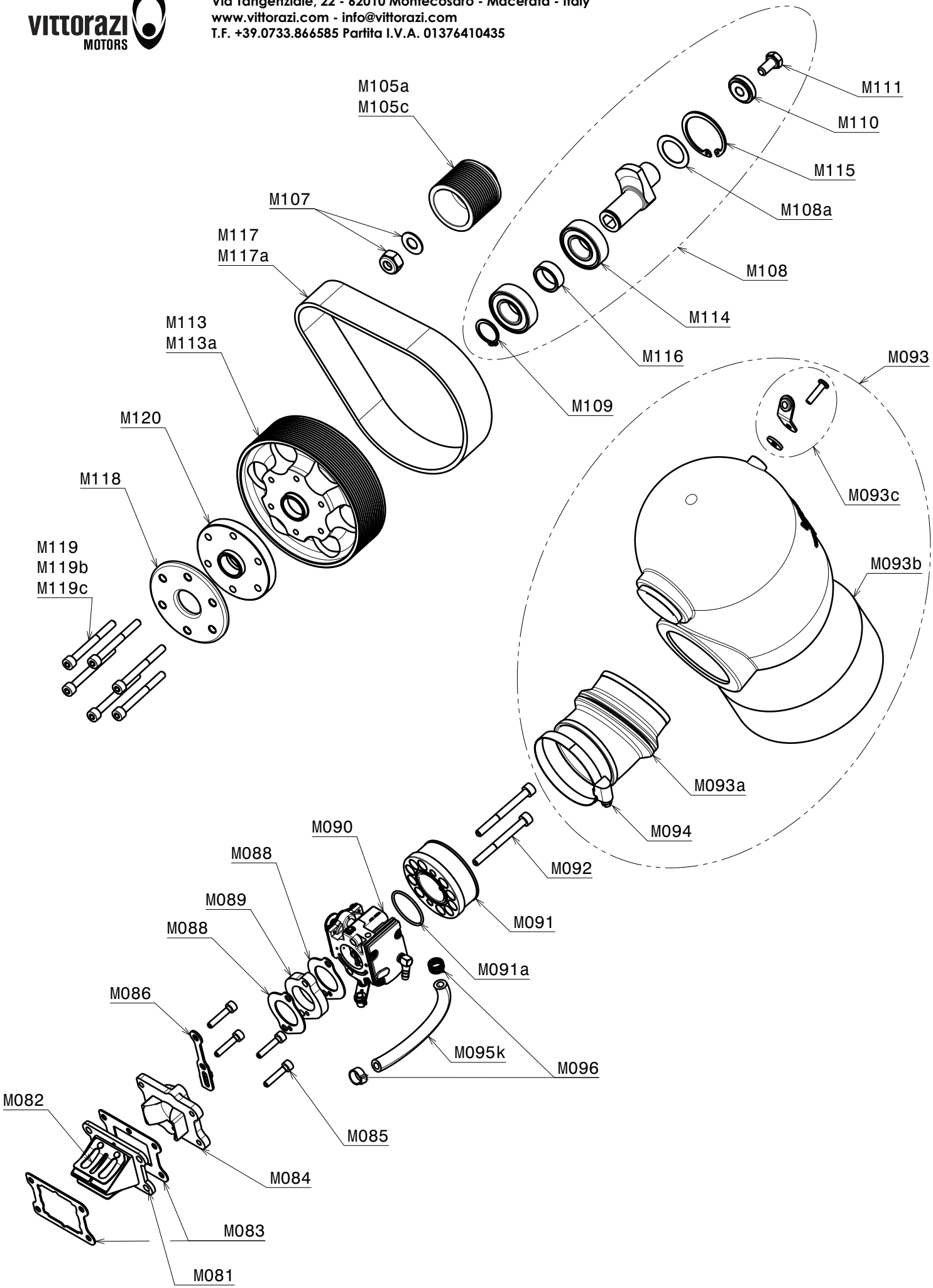

Engine: Moster 185 Classic (First version)		I.P.C. Number 0020	
Version: Manual	Group: Reduction drive/Aspiration	Update: Feb 2022	Page: 3/5

Via Tangenziale, 22 - 62010 Montecosaro - Macerata - Italy
www.vittorazi.com - info@vittorazi.com
T.F. +39.0733.866585 Partita I.V.A. 01376410435

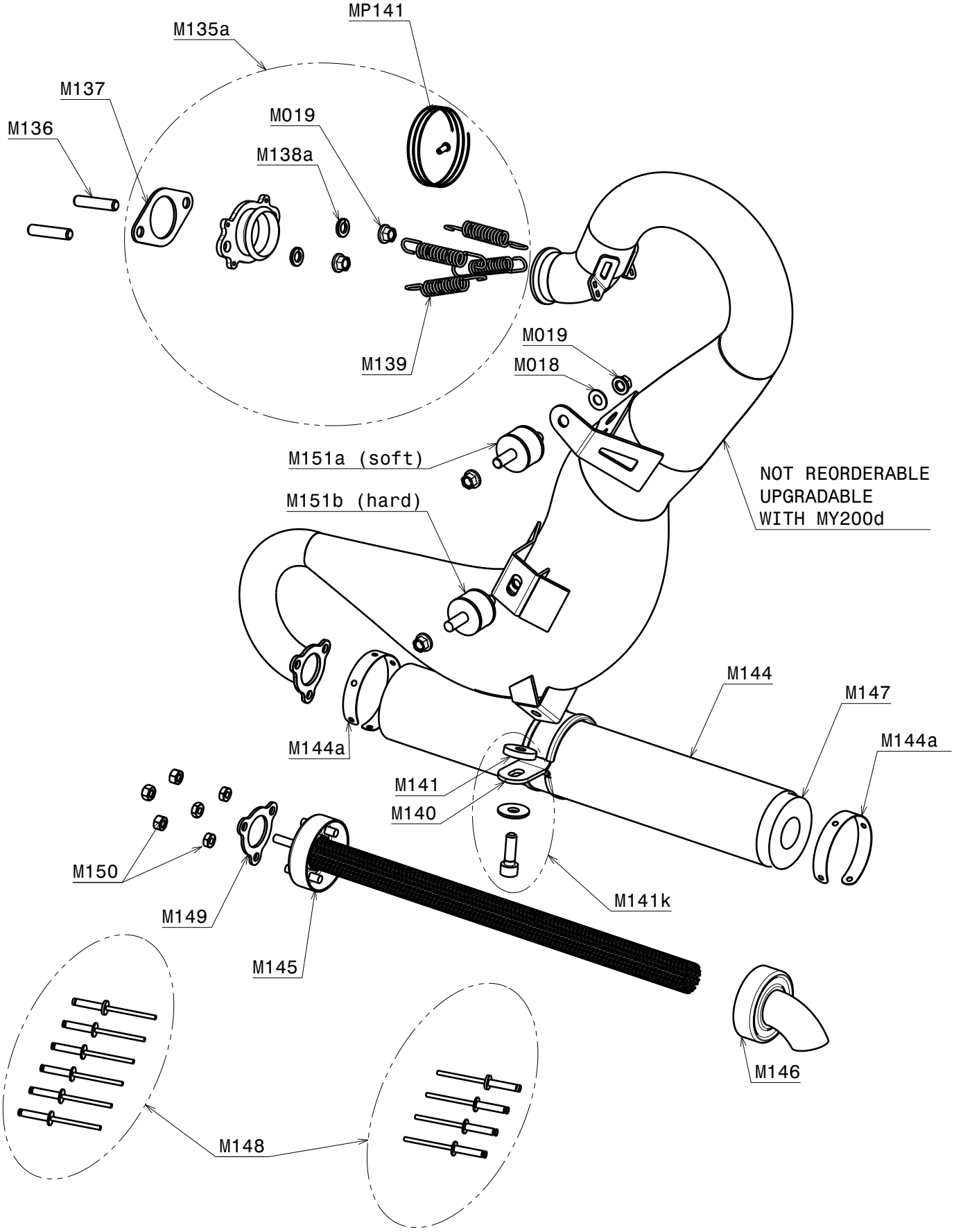

Engine: Moster 185 Classic (First version)			I.P.C. Number 0020
Version: Manual	Group: Exhaust	Update: Feb 2022	Page: 4/5

vittorazi MOTORS
Via Tangenziale, 22 - 62010 Montecosaro - Macerata - Italy
www.vittorazi.com - info@vittorazi.com
T.F. +39.0733.866585 Partita I.V.A. 01376410435

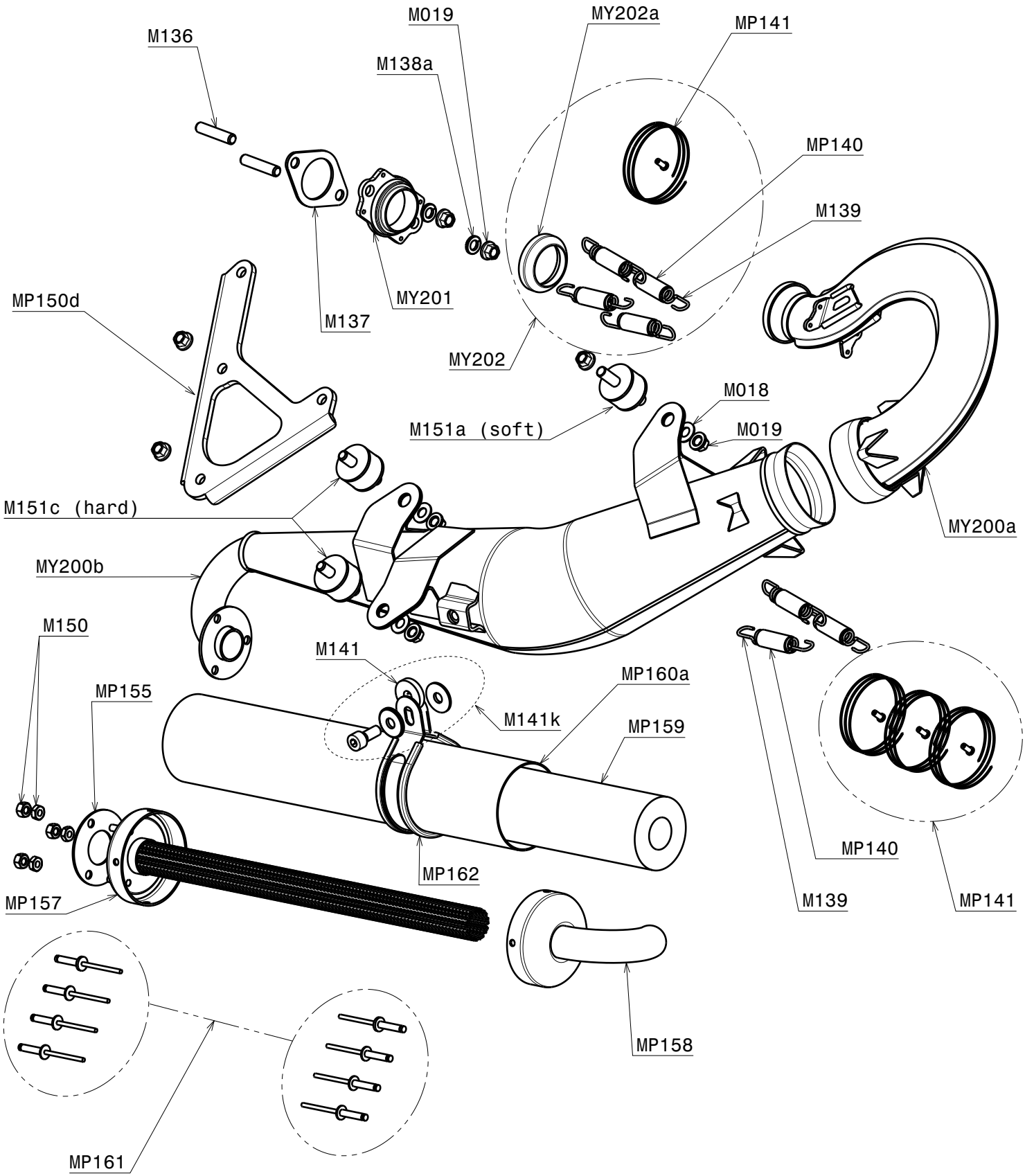

MY200d

Engine: Moster 185 Classic (First version) - For Exhaust Re-Order			I.P.C. Number 0020
Version: Manual	Group: Exhaust	Update: Feb 2022	Page: 5/5