Via Tangenziale, 22 - 62010 Montecosaro - Macerata - Italy
www.vittorazi.com - info@vittorazi.com
T.F. +39.0733.866585 Partita I.V.A. 01376410435

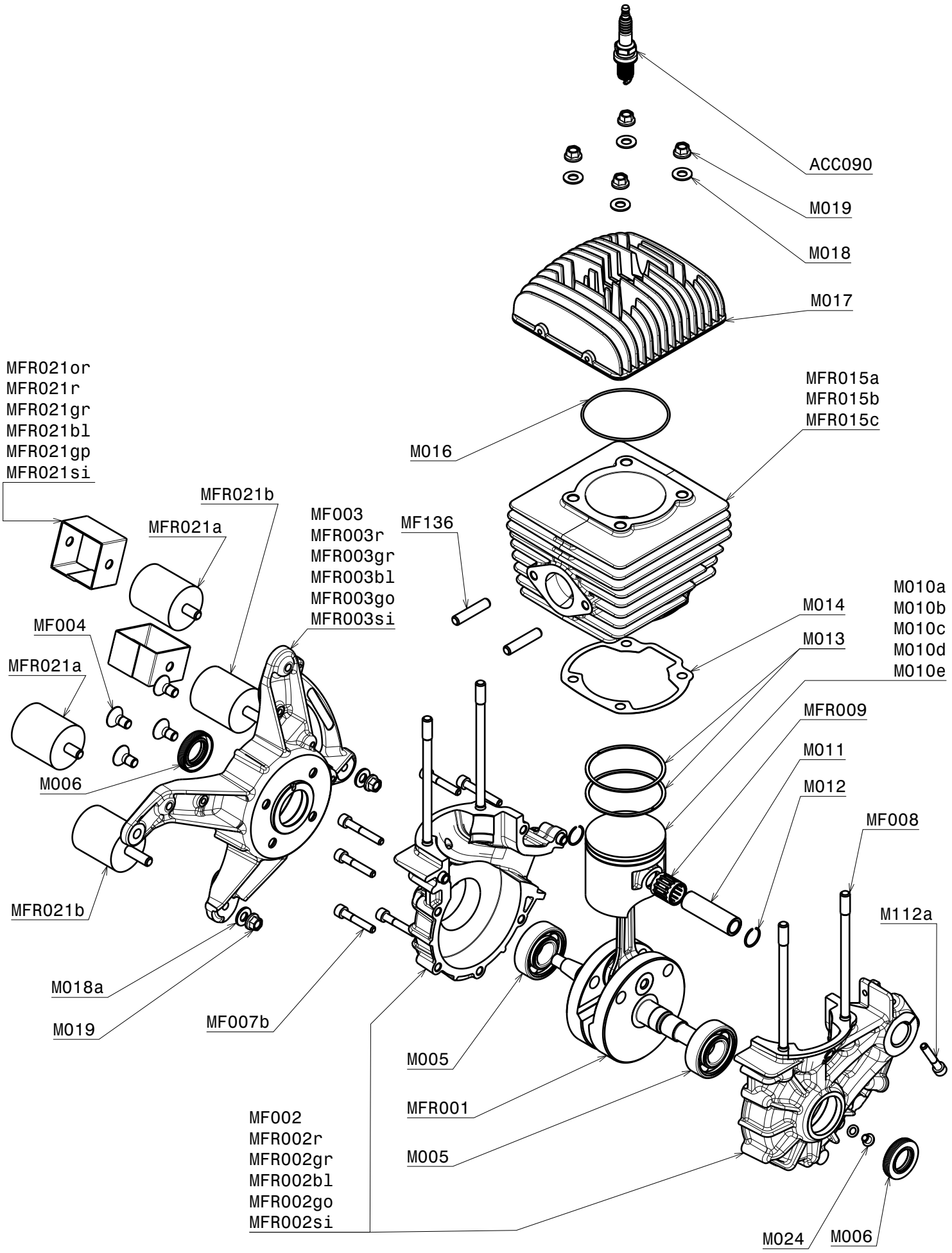

Engine: Moster 185 Factory-R		**I.P.C. Number 0052**	
Version: Manual	**Group: Thermal Unit**	**Update: November 2020**	**Page: 1/4**

Via Tangenziale, 22 - 62010 Montecosaro - Macerata - Italy
www.vittorazi.com - info@vittorazi.com
T.F. +39.0733.866585 Partita I.V.A. 01376410435

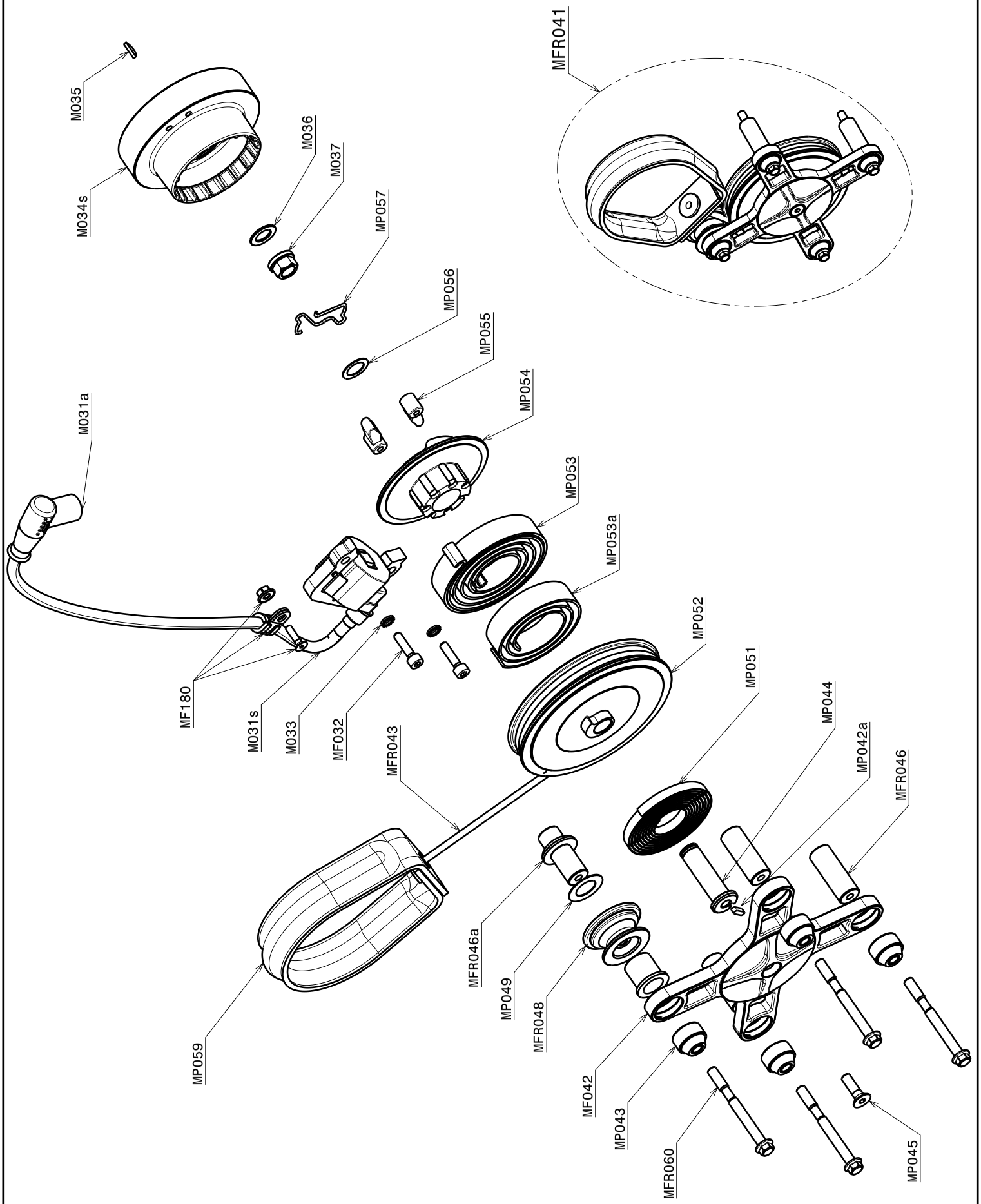

Engine: Moster 185 Factory-R		I.P.C. Number 0052	
Version: Manual	Group: Pull starter	Update: November 2020	Page: 2/4

Via Tangenziale, 22 - 62010 Montecosaro - Macerata - Italy
www.vittorazi.com - info@vittorazi.com
T.F. +39.0733.866585 Partita I.V.A. 01376410435

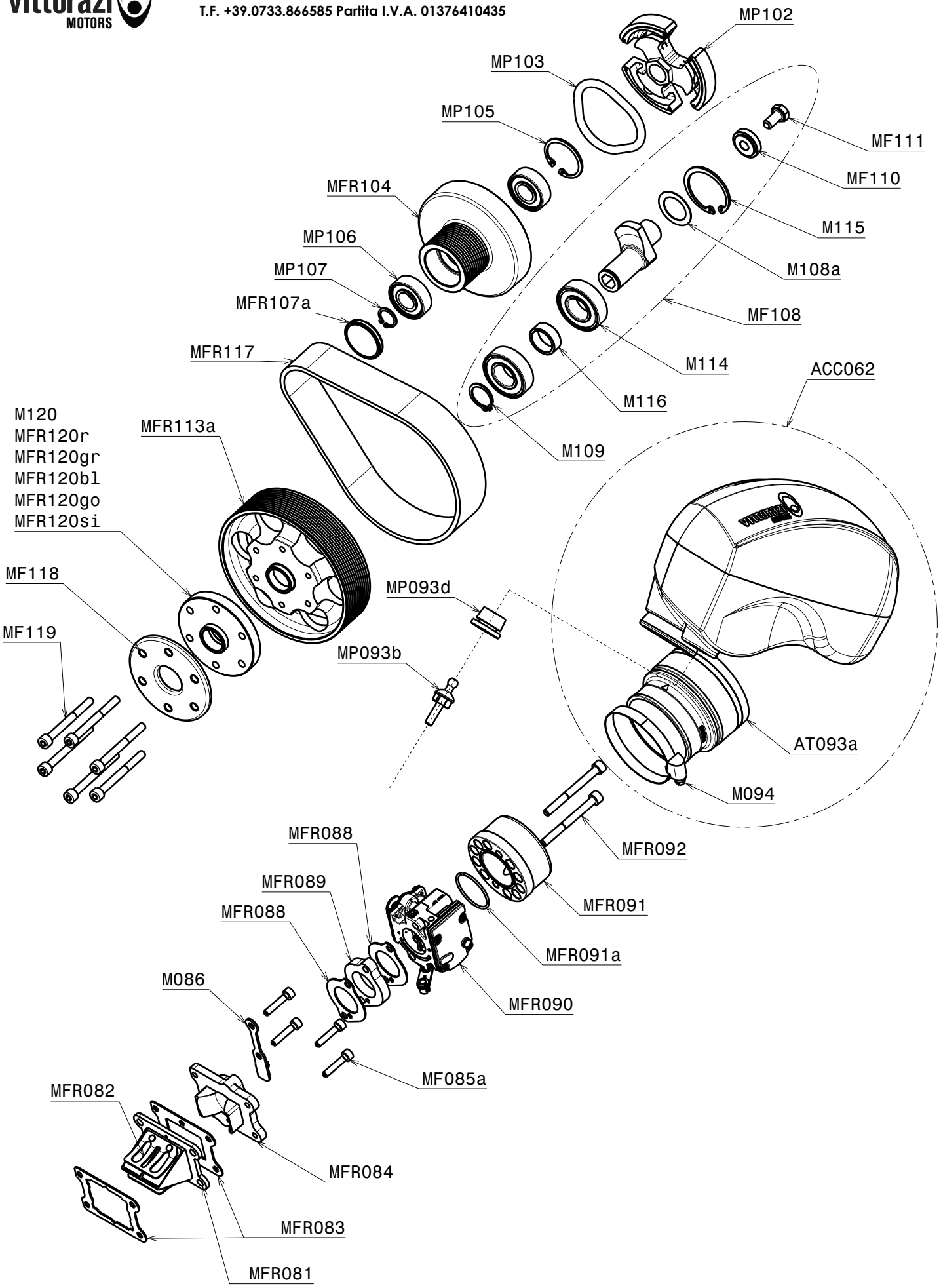

Engine: Moster 185 Factory-R			I.P.C. Number 0052
Version: Manual	Group: Reduction drive/Aspiration	Update: November 2020	Page: 3/4

Via Tangenziale, 22 - 62010 Montecosaro - Macerata - Italy
www.vittorazi.com - info@vittorazi.com
T.F. +39.0733.866585 Partita I.V.A. 01376410435

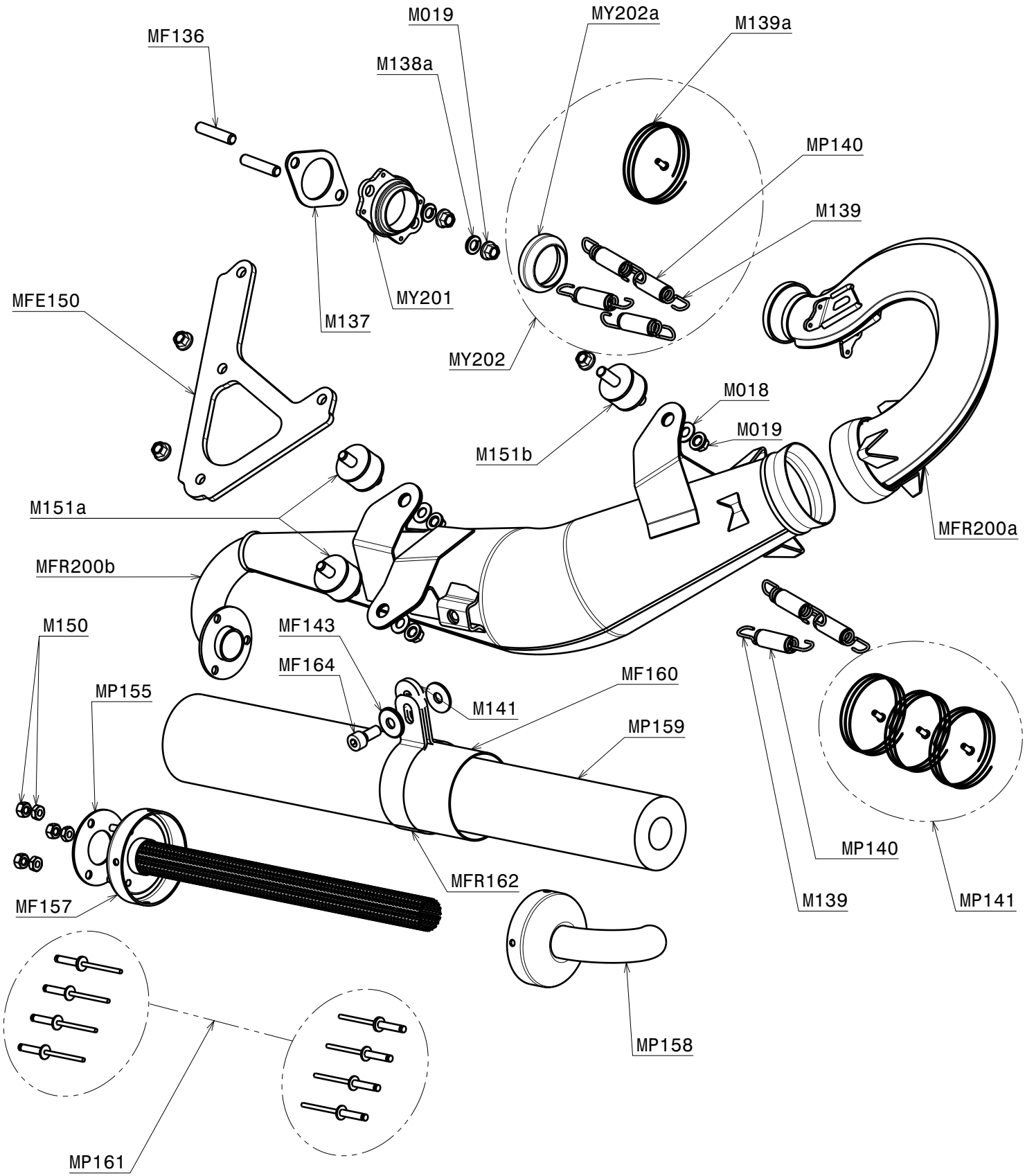

Engine: Moster 185 Factory-R			I.P.C. Number 0052
Version: Manual	Group: Exhaust	Update: November 2020	Page: 4/4